XER

Cold Room Temperature Controller

(FW rel. 93.01.01)

INDEX

1. IMPORTANT USER INFORMATION 5
2. PRODUCT DISPOSAL (WEEE) 6
3. GENERALITIES 7
4. USER INTERFACE 7
4.1 SCREENS 7
4.2 ICONS 8
4.3 KEYBOARD 8
4.4 ALARM FRAME 9
4.5 USER INTERFACE 9
4.6 SETPOINT MODIFICATION 10
4.6.1 QUICK SETPOINT ACCESS 10
4.6.2 SETPOINT MENU ACCESS 10
4.7 STAND-BY MODE 10
4.8 SPECIAL FUNCTION MENU 11
4.9 INFO MENU 12
4.10 HOTKEY – UPLOAD AND DOWNLOAD 12
4.11 PROGRAMMING MENU 13
4.11.1 MENU DESCRIPTIONS 13
4.11.2 QUICK PROGRAMMING MODE ACCESS 13
4.11.3 PROGRAMMING MENU ACCESS 14
4.11.4 PROGRAMMING MENU STRUCTURE 14
4.11.5 SEE AND MODIFY ALL PARAMETERS 14
4.11.6 SEE AND MODIFY PARAMETERS THROUGH GROUPS 15
4.11.7 X9: BUILT PARAMETER LABEL AND MODIFY ITS VALUE 16
4.11.8 USE THE PASSWORD TO ENTER THE PARAMETER LEVEL "PR2" 17
4.11.9 PASSWORD RESET PROCEDURE 18
5. PARAMETER TABLE 18
5.1 PARAMETER DESCRIPTION 18
5.1.1 Main regulation parameters – rEG 18
5.1.2 Probe configuration parameters – Prb 20
5.1.3 Visualization parameters – diS 20
5.1.4 Defrost configuration parameters – dEF 20
5.1.5 Evaporator and condenser fan configuration parameters – Fan 22
5.1.6 Auxiliary regulator parameters – AUS 23
5.1.7 Dynamic set point for condenser fan – dYn 24
5.1.8 Alarm configuration parameters - ALr 24
5.1.9 Digital output configuration parameters – out 26
5.1.10 Digital input configuration parameters – inP 28
5.1.11 Energy saving configuration parameters – ES 30
5.1.12 Counters, read only values – Cnt 30
5.1.13 Real Time Clock configuration parameters – rtC 32
5.1.14 Memory storage management – E2 33
5.1.15 Serial Communication port configuration parameters – CoM 33
5.1.16 User Interface configuration parameters – Ui 33
5.1.17 Information, read only parameters – inF 34
6. REGULATION 35
6.1 REGULATION TEMPERATURE CALCULATION 35
6.1.1 SPECIAL CONDITIONS 35
6.2 SINGLE ONOFF COMPRESSOR 35
6.2.1 COOLING ACTION 35
6.2.2 HEATING ACTION 35
6.2.3 DEAD BAND 36
7. DOUBLE ONOFF COMPRESSOR 36
7.1 NORMAL MODE LOGIC 36
7.1.1 STEP LOGIC – 2CC=HAF 36
7.1.2 PARALLEL LOGIC – 2CC=FUL 37
7.2 ENERGY SAVING MODE LOGIC 37
7.2.1 STEP LOGIC – 2CE=HAF 37
7.2.2 PARALLEL LOGIC – 2CE=FUL 38
8. PUMP DOWN 38
8.1 PUMP DOWN MAXIMUM DURATION - PDT 39
8.2 PUMP DOWN DEACTIVATION FAILURE - PDA 39
8.3 SPECIAL CONDITIONS 39
9. PULL DOWN 40
10. ENERGY SAVING 40
11. DEFROST OPERATIONS 40
11.1 DEFROST MODE 40
11.2 TIMED OR INTERVAL DEFROST 40
11.3 AUTOMATIC DEFROST 40
11.4 ELECTRIC DEFROST 41

11.5 HOT GAS DEFROST ... 41
11.6 DOUBLE PROBE DEFROST CONTROL ... 41
11.7 DEFROST WITH DOUBLE EVAPORATOR CONTROL ... 41
11.8 DEFROST WITH EVAPORATOR ICE PRESENCE CONTROL ... 42
11.9 DISPLAY VISUALIZATION DURING ANY DEFROST PHASE ... 42
11.10 HEATER ELEMENT CONTROL ... 42
11.11 END DEFROST BY TIME ALARM ... 43
12. EVAPORATOR FAN ... 43
12.1 EVAPORATOR FAN AND DIGITAL INPUT ... 43
12.2 EVAPORATOR FAN CONTROL WITH ANALOGUE OUTPUT ... 43
12.2.1 SPECIAL CONDITIONS ... 44
12.3 EVAPORATOR FAN MAINTENANCE FUNCTION ... 44
13. CONDENSER FAN ... 45
13.1 CONDENSER FAN CONTROL THROUGH AN ANALOGUE OUTPUT ... 45
13.2 CONDENSER FAN MAINTENANCE FUNCTION ... 45
13.3 DYNAMIC SETPOINT FOR CONDENSER FAN ... 46
14. AUXILIARY REGULATOR ... 46
14.1 AUXILIARY REGULATOR ... 46
14.2 ONOFF REGULATION WITH DIGITAL OUTPUT ... 46
14.3 PROPORTIONAL REGULATION WITH ANALOGUE OUTPUT ... 47
14.4 TIMED ACTIVATION ... 47
14.5 GENERAL NOTES ... 47
14.5.1 SPECIAL CONDITIONS ... 47
15. LIGHT OUTPUTS ... 48
15.1 ACTIVATION WHEN DEVICE GOES ON ... 48
15.2 ACTIVATION BY DOOR INPUT ... 48
15.3 ACTIVATION BY DIGITAL INPUT ... 48
15.4 ACTIVATION BY ENERGY SAVING ... 48
15.5 ACTIVATION BY MOTION SENSOR ... 48
15.6 ACTIVATION BY MODBUS COMMAND ... 48
15.7 ACTIVATION BY ANALOGUE OUTPUT (2AO=LIG) ... 48
15.7.1 SPECIAL CONDITIONS ... 49
16. SANITIZATION ... 49
16.1 SAFETIES ... 50
16.2 ACTIVATION THROUGH DIGITAL OUTPUT (OAX=SAN) ... 50
16.3 ACTIVATION THROUGH ANALOGUE OUTPUT (1AO, 2AO=SAN) ... 50
17. AIR EXTRACTION FAN ... 50
17.1 ACTIVATION BY ANALOGUE OUTPUT (1AO, 2AO=EFN) ... 50
17.1.1 SPECIAL CONDITIONS ... 51
18. DIGITAL OUTPUTS ... 51
18.1 COMPRESSOR OUTPUT (OAX = CP1) ... 51
18.2 DEFROST OUTPUT (OAX = DEF) ... 51
18.3 EVAPORATOR FAN OUTPUT (OAX = FAN) ... 51
18.4 ALARM OUTPUT (OAX = ALR) ... 51
18.5 TRAPPED ALARM OUTPUT (OAX = ALM) ... 51
18.6 LIGHT OUTPUT (OAX = LIG) ... 51
18.7 AUXILIARY OUTPUT (OAX = AUS) ... 52
18.8 DEAD BAND REGULATION (OAX = DB) ... 52
18.9 ON/OFF OUTPUT (OAX = ONF) ... 52
18.10 ENERGY SAVING OUTPUT (OAX = HES) ... 52
18.11 CONDENSER FAN OUTPUT (OAX = CND) ... 52
18.12 SECOND COMPRESSOR OUTPUT (OAX = CP2) ... 52
18.13 SECOND DEFROST OUTPUT (OAX = DF2) ... 52
18.14 HEATER OUTPUT (OAX = HET) ... 52
18.15 INVERTER OUTPUT (OAX = INV) ... 52
18.16 SOLENOID VALVE (OAX=SO1) ... 52
18.17 AIR EXTRACTION FAN ... 52
18.18 SANITIZATION (OAX=SAN) ... 52
19. DIGITAL INPUTS ... 52
19.1 DOOR SWITCH (IXF=DOR) ... 52
19.2 START DEFROST (IXF=DEF) ... 53
19.3 AUXILIARY OUTPUT (IXF=AUS) ... 53
19.4 ENERGY SAVING (IXF=ES) ... 53
19.5 EXTERNAL WARNING ALARM (IXF=EAL) ... 53
19.6 EXTERNAL LOCK ALARM (IXF=BAL) ... 53
19.7 EXTERNAL PRESSURE ALARM (IXF=PAL) ... 53
19.8 EVAPORATOR FAN MODE (IXF=FAN) ... 53
19.9 REMOTE HOLIDAY MODE (IXF=HDF) ... 53
19.10 REMOTE ONOFF (IXF=ONF) ... 53
19.11 LIGHT OUTPUT (IXF=LIG) ... 53
19.12 PARAMETER MAP CHANGE (IXF=MAP) ... 53
19.13 MOTION SENSOR DETECTOR (IXF=EMT) ... 53
19.14 LOW PRESSURE INPUT FOR PUMP DOWN (IXF=LPS) ... 53

19.15 CLEANING (IXF=CLN) ... 53
19.16 GAS LEAKAGE ALARM (IXF=GAS) ... 54
19.17 STOP COOLING FUNCTION (IXF=STC) ... 54
19.18 SANITIZATION (IXF=SAN) ... 54
19.19 TRAPPED MAN ALARM (IXF=TPA) ... 54
20. ANALOGUE OUTPUTS ... 54
20.1 ANALOGUE OUTPUTS CONFIGURATION ... 54
20.2 WORKING MODE ... 55
20.3 TIMED ACTIVATION (1AO, 2AO=TIM) ... 55
20.4 ALARM OUTPUT (1AO, 2AO=ALR) ... 55
20.5 FIXED VALUE (1AO, 2AO=VAL) ... 55
20.6 SANITIZATION (1AO, 2AO=SAN) ... 55
20.7 AIR EXTRACTION FAN (1AO, 2AO=EFN) ... 55
21. ALARM SIGNALLING ... 55
21.1 PROBE FAILURE – PX ... 56
21.2 TEMPERATURE ALARM – HA, LA ... 56
21.3 HIGH TEMPERATURE PRE ALARM – HP2 ... 56
21.4 SECOND TEMPERATURE ALARM – HA2, LA2 ... 57
21.5 DOOR OPEN ALARM – DA ... 57
21.6 WARNING ALARM – EA ... 58
21.7 LOCKOUT ALARM – CA ... 58
21.8 PRESSURE SWITCH ALARM – PA ... 58
21.9 INTERNAL MEMORY ALARM – EE ... 59
21.10 REAL TIME CLOCK ALARM – RTC, RTF, BAT ... 59
21.10.1 Type of managed alarms ... 59
21.10.2 Real Time Clock Battery Replacement ... 59
21.10.3 Alarm visualization mode ... 60
21.11 ANTI FREEZING ALARM - SAF ... 60
21.12 TRAPPED MAN ALARM - TPA ... 60
21.13 PUMP DOWN ALARMS - PDT, PDA ... 60
21.14 CLEANING FUNCTION - CLT ... 61
21.15 GAS LEAKAGE ALARM - GAS ... 61
21.16 EVAPORATOR FAN MAINTENANCE - FSR ... 61
21.17 CONDENSER FAN MAINTENANCE - CSR ... 61
21.18 DEFROST ENDS BY TIME - DET ... 62
21.19 SANITIZATION ALARM - SAN ... 62
22. SERIAL COMMUNICATION ... 62
23. INSTALLATION AND MOUNTING ... 62
23.1 DIMENSIONS ... 62
23.2 DIN RAIL MOUNT ... 63
23.3 WALL MOUNT ... 63
24. WIRING DIAGRAMS ... 63
24.1 LEGENDA ... 64
24.2 XER160P OR XER260P ... 65
24.3 XER140P OR XER240P ... 66
24.4 XER261P WITH CIRCUIT BREAKER ... 67
24.5 TERMINAL BLOCK DESCRIPTIONS ... 68
25. TECHNICAL SPECIFICATIONS ... 69
26. APPENDIX ... 71
26.1 TOOLS ... 71
26.1.1 X-MOD ... 71
26.1.2 WIZMATE ... 71
26.1.3 HOTKEY ... 71
26.1.4 USB TO RS485 CONVERTER ... 71

1. IMPORTANT USER INFORMATION

- The symbol is intended to alert the user of a non-insultated voltage soruce within the product area that is sufficiently high to constitute a risk of electric shock to persons.

- The symbol is intended to alert the user of important operating and maintenance (servicing) instructions.

- Dixell Srl reserves the right to modify this user's manual at any time without prior notice. The documentation can be downloaded from the website
  https://webapps.emerson.com/Dixell/Pages
  even prior to purchase.

- This manual is an integral part of the product and must always be kept near the device for easy and quick reference. The product cannot be used as a safety device. Please read this manual very carfully be sure you understand the information provided before using the device.

- Verify that the power supply voltage is correct before connecting the device. Do not expose it to water or humidity: use the controller only within the operating limits, avoiding sudden temperature changes and high atmospheric humidity in order to prevent condensation from forming. Recommendations: disconnect all the electrical connections before performing any maintenance task; insert the probe where it cannot be reached by the End User; the device must not be opened; consider the maximum current that can be applied to each relay; make sure that the wires of the probes, of the loads and the electical power supply cables are sufficiently separated from each other, without crossing or intertwining. In case of applications in industrial environments, it may be useful to use the main filters as well as the inductive loads.

- The customer shall bear full responsibility and risk for product configuration in order to achieve the the final installation of the equipment/system. Upon the customer's request and following a specific agreement, Dixell Srl may be present during the start-up of the final machine/application, as a consultant, however, under no circumstances can the company be held responsible for the correct operation of the final equipment/system.

- Since Dixell products are part of a high-level technology, a qualification and a configuration/programming/commissioning stage is required to best use them. Otherwise, these products may malfunction and Dixell cannot be held responsible. The product must not be used in any way that differs from that stipulated in the documentation.

- The device must always be installed inside an electrical panel that can only be accessed by authorised personnel. For safety purposes, the keyboard must be the only part that can be reached.

- The electrical wiring connections must never be modify while the device is being used.
- It is good practice to bear in mind the following indications for all Dixell products:
    - Prevent the electronic circuits from getting wet as contact made with water, humidity or any other type of liquid can damage them. Comply with the temperature and humidity limits specified in the manual in order to store the product correctly.
    - The device must not be installed in particularly hot environments as high temperatures can damage the electronic circuits and/or plastic components forming part of the casing. Comply with the temperature and humidity limits specified in the manual in order to store the product correctly.
    - Under no circumstances is the device to be opened – the user does not need any internal component. Please contact qualified service personnel for any assistance.
    - Prevent the device from being dropped, knocked or shaken as either can cause irreparable damage.
    - Do not clean the device with corrosive chemical products, solvents or aggressive detergents.
    - The device must not be used in applications that differ from that specified in the following document.

- ***Separate the power supply of the device from the rest of the electrical devices connected inside the electrical panel. The secondary of the transformer must never be connected to the earth.***

- Dixell Srl reserves the right to change the components of its products, even without notice, ensuring the same and unchanged functionality."

2. PRODUCT DISPOSAL (WEEE)

In compliance with the Directive 2002/96/EC of the European Parliament and of the Council of January 27th 2003 and to the relative national legislation, please note that:

- There lies the obligation not to dispose of electrical and electronic waste as municipal waste but to separate the waste.
- Public or private collection points must be used to dispose of the goods in accordance with local laws. Furthermore, at the end of the product's life, it is also possible to return this to the retailer when a new purchase is made.
- This equipment may contain hazardous substances. Improper use or incorrect disposal can have adverse effects on human health and the environment.
- The symbol shown on the product or the package indicates that the product has been placed on the market after August 13th 2005 and must be disposed of as separated waste.
- Should the product be disposed of incorrectly, sanctions may be applied as stipulated in applicable local regulations regarding waste disposal.

3. GENERALITIES

The **XER** is a microprocessor-based controller suitable for cold room applications on medium or low temperature ventilated refrigeration units. Up to 6 relay outputs can be configurated to control compressor, fans, light, defrost or auxiliary outputs. The device is also provided with up to 4 NTC or PT1000 probe inputs. There are up to 2 configurable digital inputs. By using the **HOT-KEY** it is possible to program the device quickly and easily. The controller is also compatible with the Wizmate software.

4. USER INTERFACE

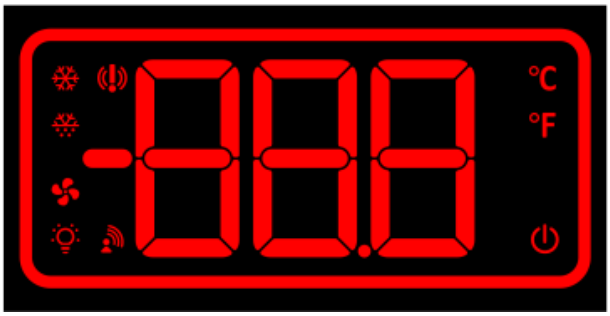

XER has a button user interface with an alarm frame. Specific screens can be used to enter or activate some functions.

4.1 SCREENS

SCREEN	DESCRIPTION
	Home: this screen shows the regulation temperature value, the measurement unit, the active alarms and the output activation. This is the first screen after power on or after exiting from other screens.
	SET point modification: this screen enables the modification of the Set point.
	PROGRAMMING mode: this screen enables the modification of the parameter values.
	Functions: on this screen is it possible to enable some special features.
	Information: these screens show the information relative to I/O (probe, digital inputs and analogue outputs).
	Stand-By: in this condition all outputs are deactivated.
	HotKey Download: “doL” label and alarm frame animation during download operations (copy from HotKey to the internal memory)
	HotKey Upload: “UPL” label and alarm frame animation during upload operations (copy from internal memory to the HotKey)
	X9: it is possible to build the label of the parameter to be visualized or modified.

4.2 ICONS

	DESCRIPTION	MODE	FUNCTION
	LIGHT/BACK	**OFF**	Light output OFF
		FLASH	
		ON	Light output ON
	COMPRESSOR	**OFF**	Compressor output OFF
		FLASH	Anti short cycle delay is running
		ON	Compressor output ON
	FAN	**OFF**	Evaporator fan output OFF
		FLASH	Activation delay is running
		ON	Evaporator fan output ON
	DEFROST	**OFF**	Defrost output is OFF
		FLASH	Activation delay is running
		ON	Defrost output is ON
	ALARM	**OFF**	No alarm is active
		FLASH	
		ON	Some alarm is active
°C	**Celsius Degree**	**OFF**	Not used
		FLASH	Not used
		ON	Measurement units: Celsius degree
°F	**Fahrenheit Degree**	**OFF**	Not used
		FLASH	Not used
		ON	Measurement units: Fahrenheit degree
	ONOFF	**OFF**	
		FLASH	
		ON	The device is in standby mode

4.3 KEYBOARD

ICON	STANDARD	MODE	OTHER FUNCTIONS
	LIGHT or BACK (button “b1”)	**Normal**	Depends on par. **b1C**
		3 sec	Depends on par. **b1t**
	DEFROST (button “b2”)	**Normal**	Depends on. **b2C**
		3 sec	Depends on par. **b2t**
	DOWN (button “b3”)	**Normal**	Depends on par. **b3C**
		3 sec	Depends on par. **b3t**

SET	SET (button “b4”)	**Normal**	Depends on par. **b4C**
		3 sec	Depends on par. **b4t**
^	UP (button “b5”)	**Normal**	Depends on par. **b5C**
		3 sec	Depends on par. **b5t**
⏻	STAND-BY (button “b6”)	**Normal**	Depends on par. **b6C**
		3 sec	Depends on par. **b6t**

4.4 ALARM FRAME

TYPE OF ALARM	LABEL ON DISPLAY	ALARM ICON	ALARM FRAME	BUZZER
Warning	Px, HA, LA, HP2, HA2, LA2, EA, dA, rtC, rtF; bAt	ON	OFF	ON
Lockout	CA, PA, EE, SAF, PdA	ON	ON	ON
Man trapped alarm	tPA, tME	ON	BLINK (500ms on + 500ms off)	ON
Gas leakage alarm	GAS, GAC, GAL, GAH, GAF, GSS	ON	BLINK (500ms on + 500ms off)	ON
Cleaning	CLt	OFF	Rot Right	OFF
Fan maintenance	FSr, CSr	OFF	OFF	OFF
Sanitization	SAn	OFF	Rot Right	OFF
Parameter value modified	Parameter value blinks 3 times	OFF	Rot Right + 2 blink	OFF
Parameter upper limit reached	Parameter value blinks 1 time	OFF	1x BLINK (500ms on + 500ms off) of upper part of the frame	OFF
Parameter lower limit reached	Parameter value blinks 1 time	OFF	1x BLINK (500ms on + 500ms off) of the lower part of the frame	OFF

4.5 USER INTERFACE

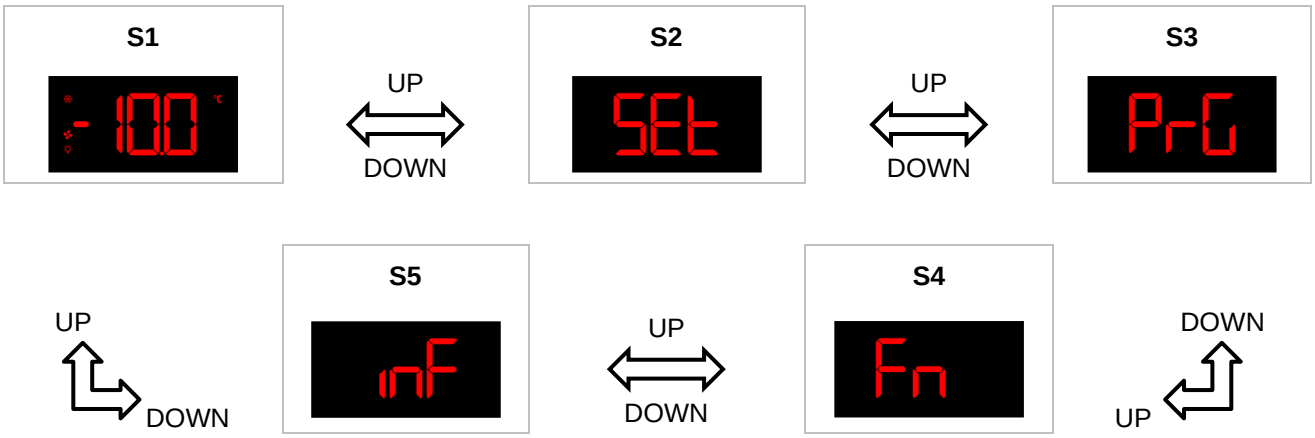

S1: Home screen
S2: Direct access to Set point modification
S3: Direct access to Programming mode
S4: Direct access to special Function activation
S5: Direct access to I/O information

Use UP or DOWN button to move through the screens **S1**…**S5**. The logic implements a circular browsing: from **S1** is possible to go to **S5** or to **S2** depending on the pressed button. A programmable timeout is implemented to return **HOME (S1)** from any other screen.

4.6 SETPOINT MODIFICATION

When in **HOME screen**, it is possible to enter the **Setpoint Menu**:

- By keeping the **SET** button pressed for 3 sec.
- By moving to SET screen and entering the Setpoint menu to modify the current SET value.

The temperature measurement icon (°C or °F) will blink to indicate that the current displayed value is editable.

To exit from Setpoint Menu:

- Wait for timeout (see par. SC1)
- Press **SET** button to confirm value and come back to the **HOME** screen.
- Press **BACK** button (button “b1”) to exit and come back to the **HOME** screen.

4.6.1 QUICK SETPOINT ACCESS

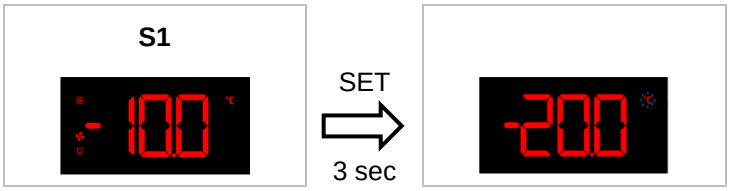

4.6.2 SETPOINT MENU ACCESS

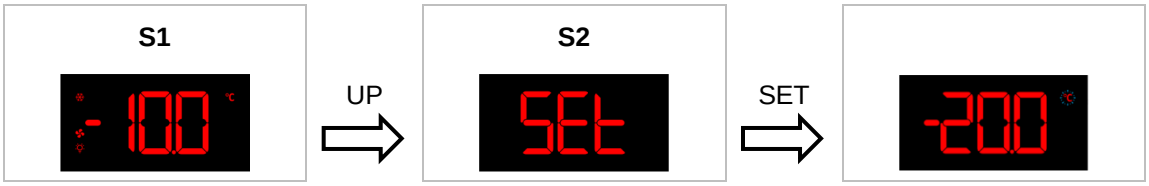

4.7 STAND-BY MODE

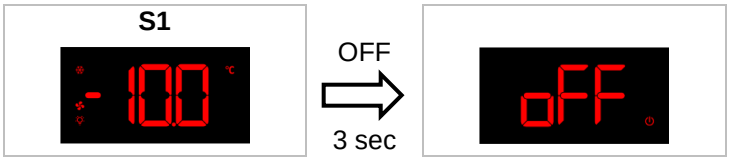

When in **HOME** screen, keep the OFF button pressed for 3 sec to activate stand-by mode. All outputs and alarms are deactivated in Stand-by mode. It is possible to visualize the label “oFF” timely through the par. **SC9**. With **SC9=YES**, the label “oFF” will appear 1 sec out of 10.

4.8 SPECIAL FUNCTION MENU

This menu enable the following special functions:

- SAn: sanitization (see par. 16)
- EFn: extraction fan (see par. 17)

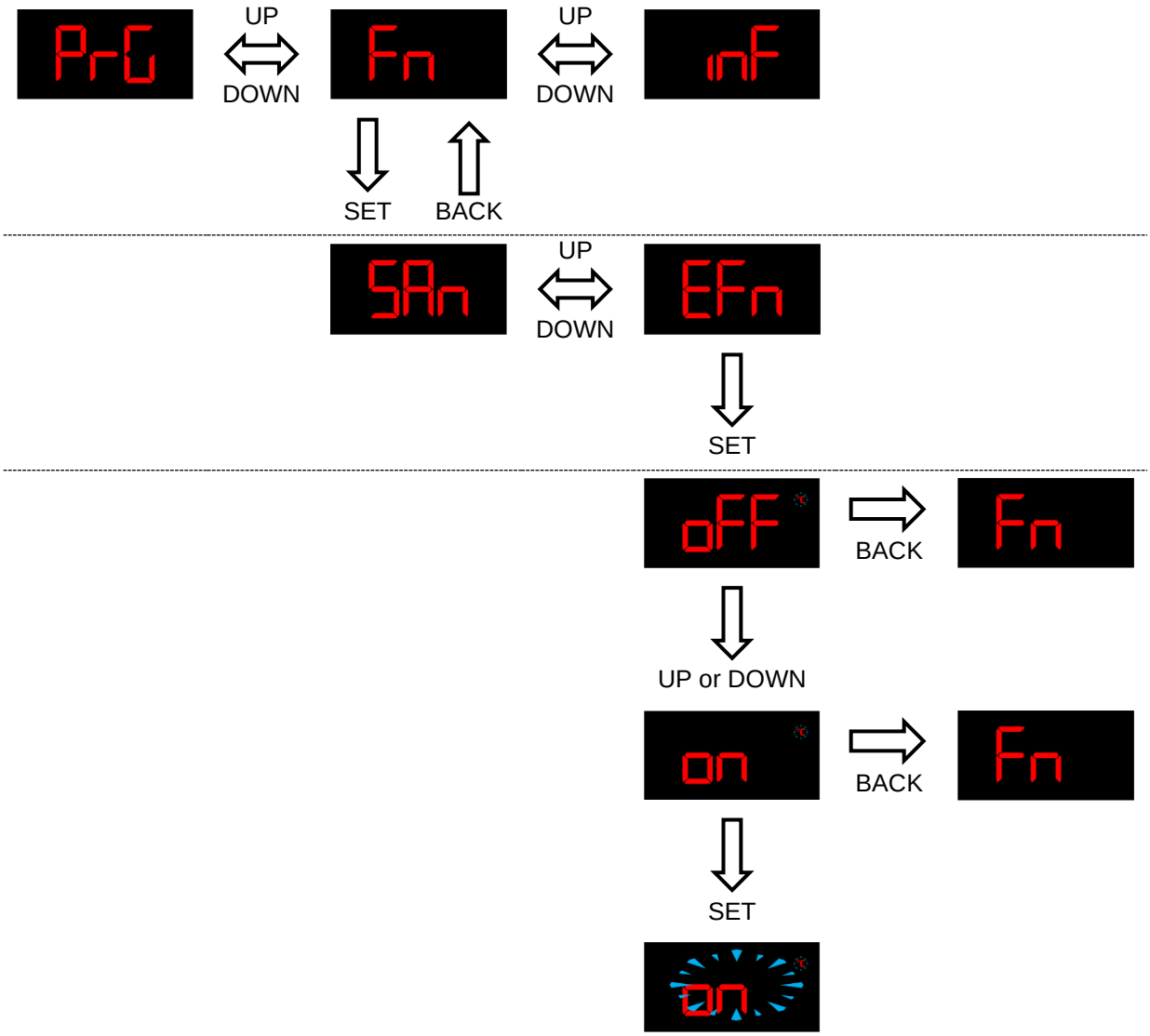

4.9 INFO MENU

This menu allows the immediate visualization of the available I/Os:

- Probe values
- Digital input status
- Analogue output values (if present and activated)

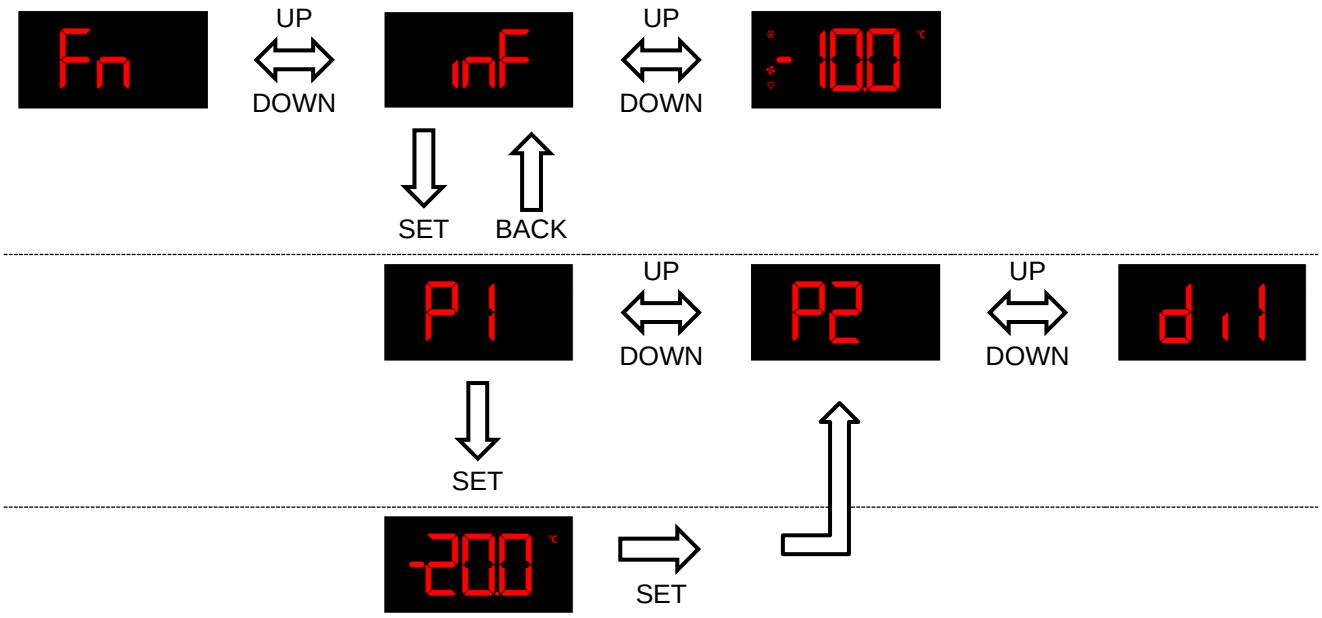

4.10 HOTKEY – UPLOAD AND DOWNLOAD

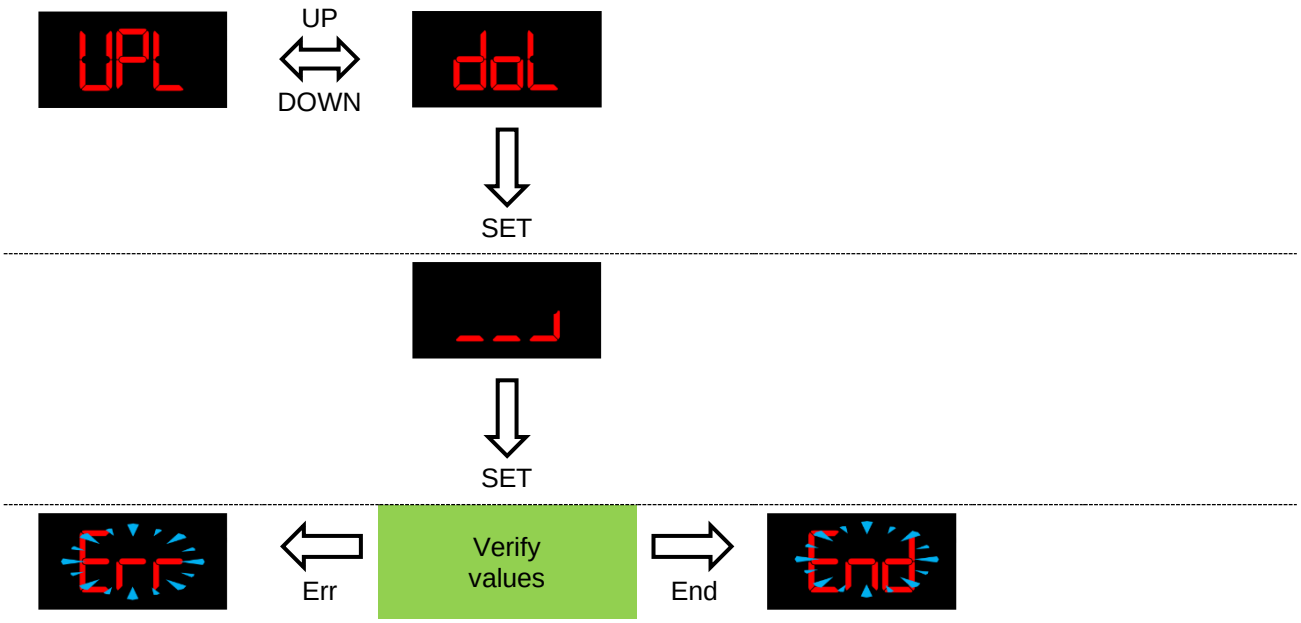

Both **HotKey Upload and Download** operations can be activated only after power-on.
To start the selected operation, follow these instructions:

1. Device power-off
2. Open the plastic box and insert the HotKey-64K (on the 5-pin ports on the back of the device)
3. Power-on the device and select:
   a. **UPL** to copy the parameters from device memory to the **HotKey**
   b. **doL** to copy the parameters from **HotKey** to the device memory
4. Press the **SET** button to start the selected operation
5. The copying procedure will start and the alarm frame will start rotating-right 3 times during the copy operations.

6. At the end of the copying procedure, a message will notify the user that the operation has been competed:
    a. **End**: all parameters have been copied
    b. **Err**: some error occours during copying operations

4.11 PROGRAMMING MENU

When in **HOME screen**, it is possible to enter the **Programming Menu**:

- By keeping the **SET+DOWN** buttons pressed for 3 sec.
- By moving to PRG screen and entering the Programming menu to modify the current parameter values.

When into the Programming menu, the temperature measurement icon (°C or °F) will blink to indicate that the current displayed value is editable.

To exit from Programming Menu:

- Wait for timeout (see par. **SC5**)
- Press **BACK** button (button “b1”) until come back to the **HOME** screen.
- Keep the **BACK** button (button “b1”) pressed for 3 sec to exit and come back to the **HOME** screen.

4.11.1 MENU DESCRIPTIONS

Group Label	Description
ALL	All parameters menu
rEG	Main regulation parameters
Prb	Probe configuration parameters
diS	Visualization parameters
dEF	Defrost configuration parameters
FAn	Evaporator and condenser fan configuration parameters
AUS	Auxiliary regulator parameters
dYn	Dynamic setpoint for condenser fan
ALr	Alarm configuration parameters
oUt	Digital and analogue output configuration parameters
inP	Digital input configuration parameters
ES	Energy saving configuration parameters
Cnt	Counters, read only values
rtC	Real Time Clock configuration parameters
E2	Memory storage management
CoM	Serial Communication port configuration parameters
Ui	User Interface configuration parameters
inF	Information, read only parameters
PAS	Password for entering protected menu parameters
_ _ _	X9 Menu

4.11.2 QUICK PROGRAMMING MODE ACCESS

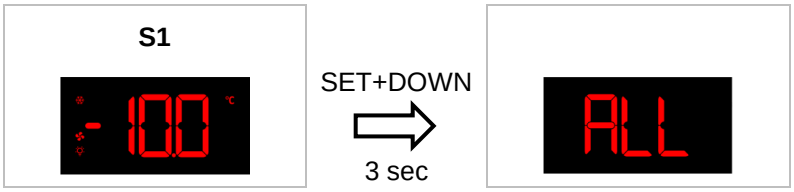

4.11.3 PROGRAMMING MENU ACCESS

4.11.4 PROGRAMMING MENU STRUCTURE

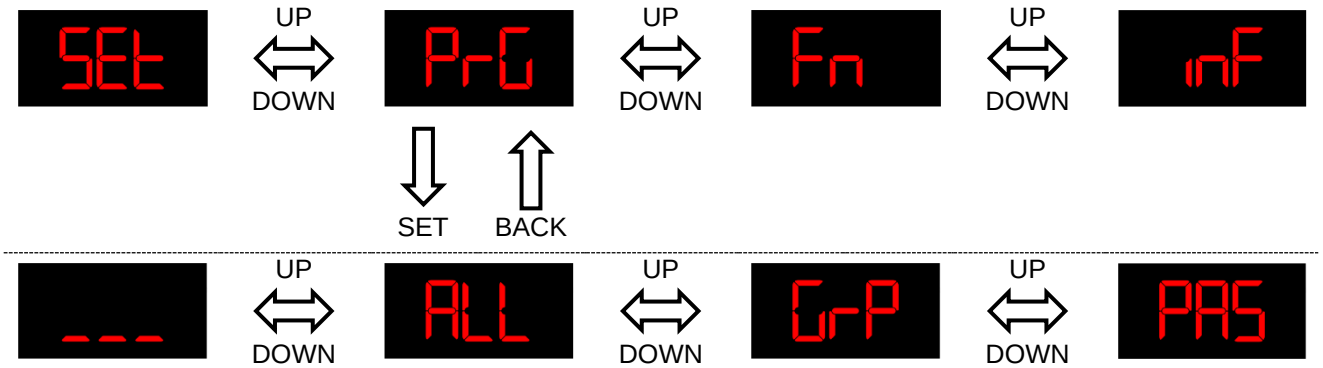

4.11.5 SEE AND MODIFY ALL PARAMETERS

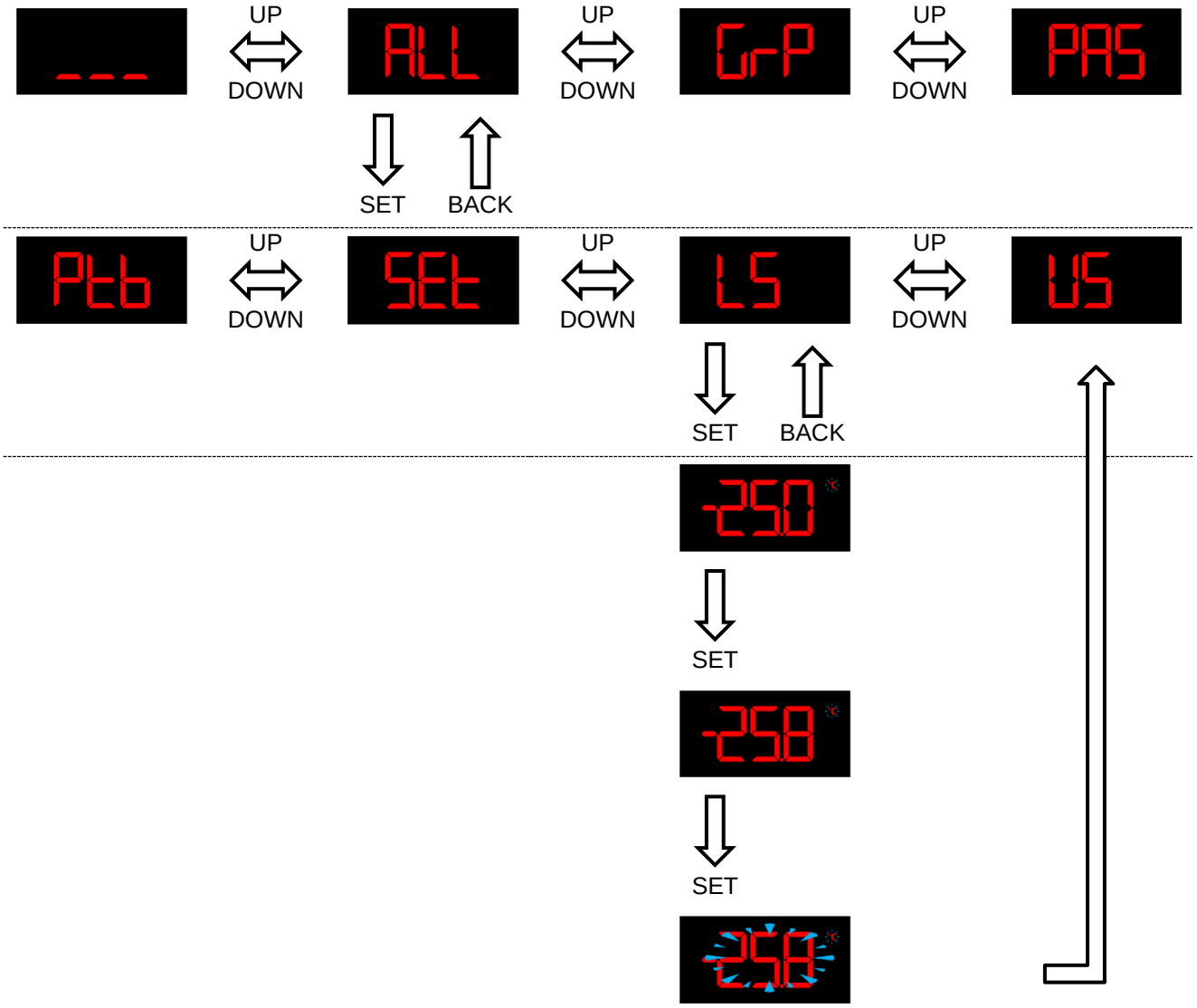

4.11.6 SEE AND MODIFY PARAMETERS THROUGH GROUPS

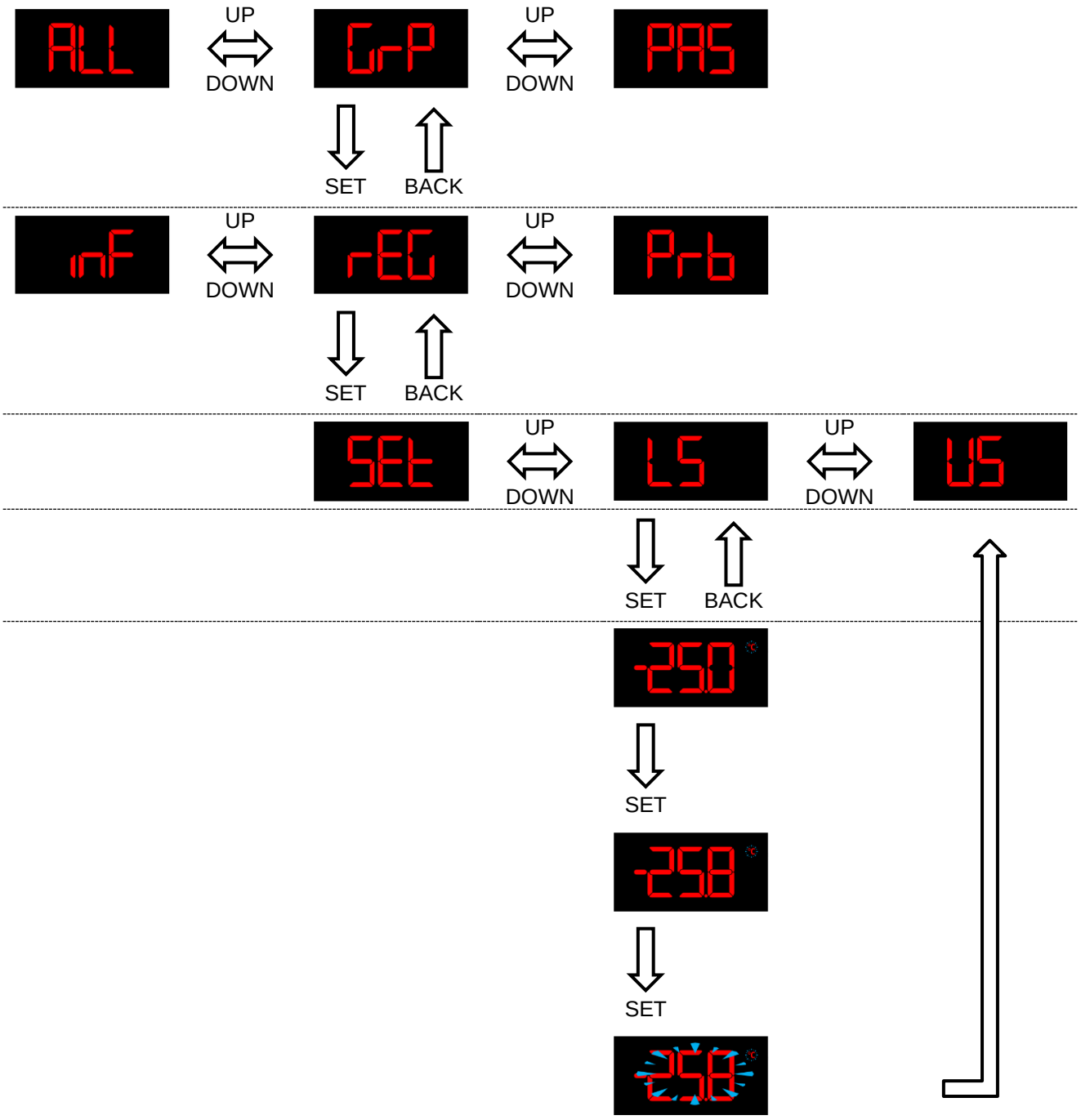

4.11.7 X9: BUILT PARAMETER LABEL AND MODIFY ITS VALUE

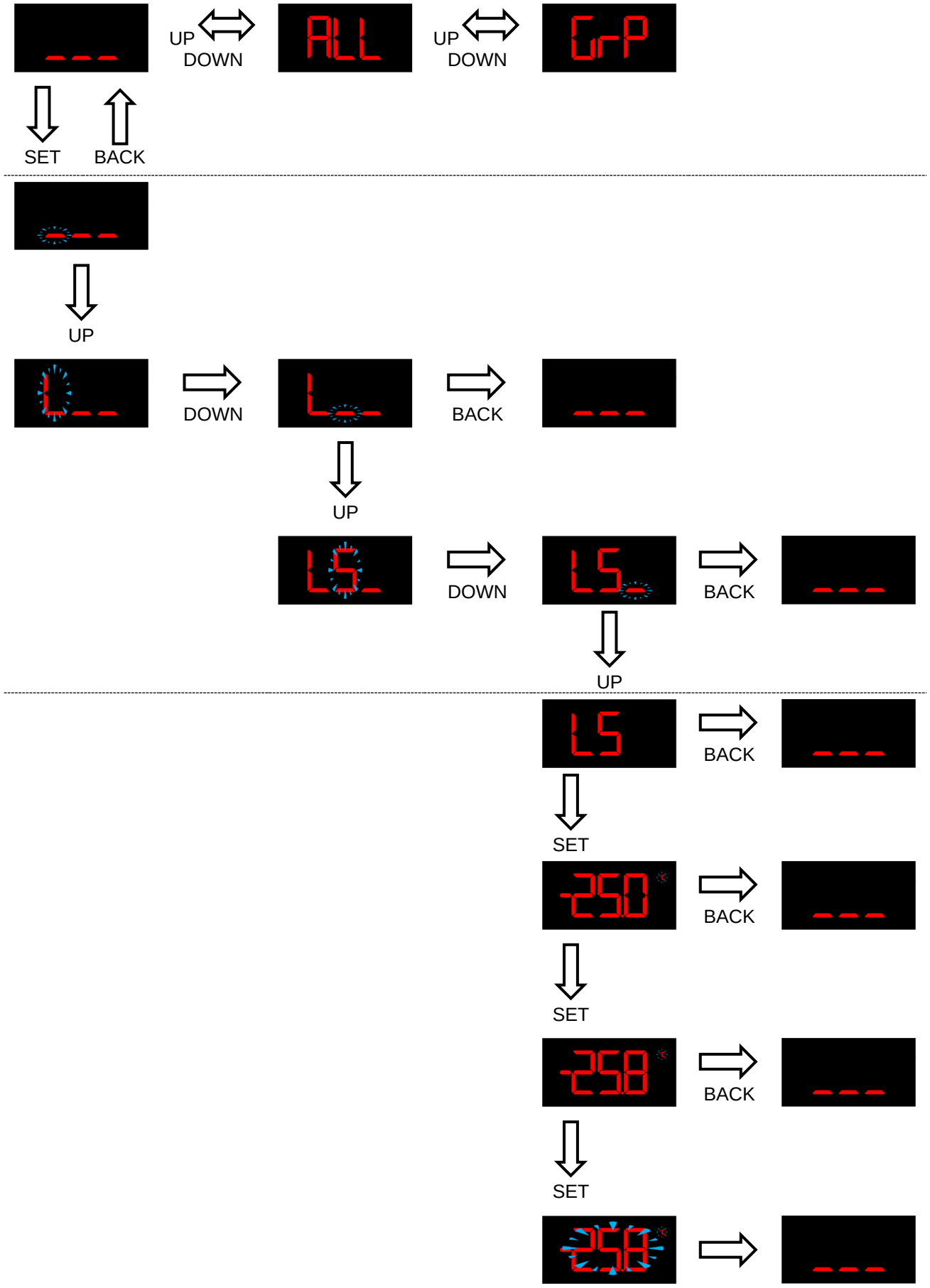

Every parameter is normally identified by a unique label that can have two or three alphanumeric characters. When in the "**X9**" Screen, it is possible to create the parameter label by selecting every single part of the label itself (first, second and third char). The system is able to drive the user through the available symbols, showing only the available ones to speed up the creation of the label.
For example, if a modification of the "interval between defrosts" parameters is required (label "idF"), these are the steps to follow:

- Enter the **X9** screen
- Select the first char position (lower segment on the left will blink)
- Use the UP button to browse through the available characters until char "i" (lowercase) appears
- Use the DOWN button to move to the second char position (segment in the middle)
- Use the UP button to browse through the available characters until char "d" appears
- Use the DOWN button to move on the third char position (segment on the right)
- Use the UP button to browse through the available characters until char "F" appears
- Enter the par. value by using the **SET** button.

NOTE: pay attention to the upper or lower case when browsing through the available characters.
For simplicity, here is the complete list of available characters: A, b, C, d, E, F, G, H, i, L, M, n, o, P, q, r, S, t, u, V, Y, 0, 1, 2, 3, 4, 5, 6, 7, 8 and 9.

4.11.8 USE THE PASSWORD TO ENTER THE PARAMETER LEVEL "PR2"

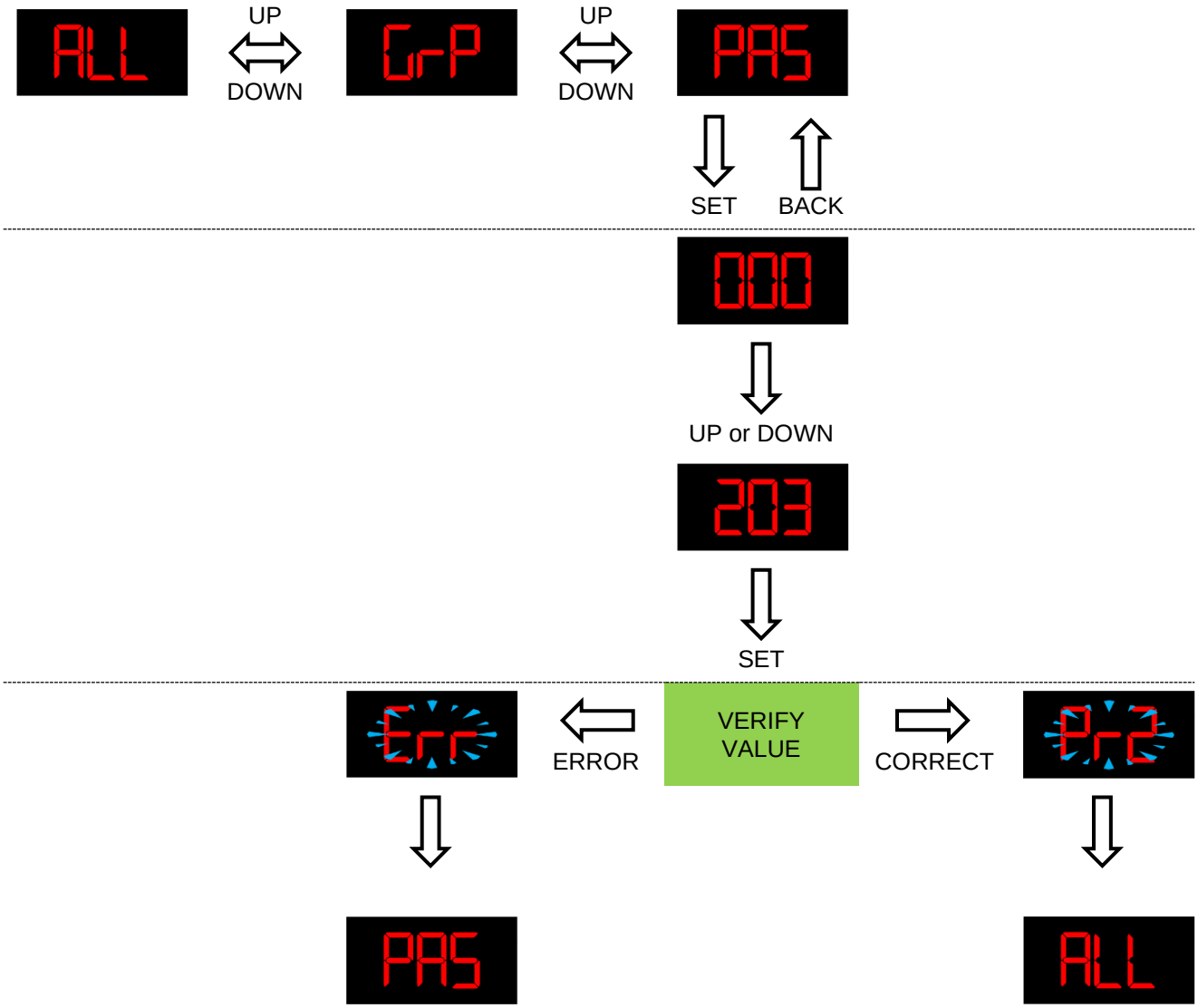

When in Pr2, the label of all parameters in Pr1 will have the "decimal point".
The level Pr2 will be accessible until exiting programming mode.

4.11.9 PASSWORD RESET PROCEDURE

The default password value for XER is “000”. It is possible to set a different value for entering the protected parameters (level PR2) by using the par. **PSU**. Par. **PSU** is visible and editable only in level PR2.

in If a password reset is required, follow these procedures:

4.11.9.1 Wizmate

- Connect Wizmate to the serial port
- Login into Wizmate using the “Administrator” account
- Scan the network and then read the existing configuration
- Go to **PSU** parameter and read the current value or modify it as for your requirements
- Update the XER parameter map if required

4.11.9.2 HOTKEY

- Upload the existing configuration using a compatible HOTKEY
- Login into Wizmate using the “Administrator” account
- Read the HOTKEY using the **ProgTool**
- Go to **PSU** parameter and read the current value or modify it as for your requirements.
- Update the XER parameter map if required (download the modified map using the HOTKEY)

5. PARAMETER TABLE

Here are the descriptions of the device parameters.

NOTE: depending on the configuration, some parameters or entire groups of them could not be available. Here below the complete list of available parameters, with their own descriptions, is reported.

Pr1	Parameter present into Pr1 level
Pr2	Parameter present into Pr2 level (gray shaded cells)

5.1 PARAMETER DESCRIPTION

5.1.1 Main regulation parameters – rEG

LABEL	DESCRIPTION	RANGE	MEANING	VALUE
SEt	Set Point	LS to US	Range from LS to US	3.0
LS	Minimum Set point	[-100.0°C to SET] [-148.0°F to SET]	Define the minimum value for the set point	-100.0
US	Maximum Set point	[SET to 150.0°C] [SET to 302.0°F]	Define the maximum value for the set point	150.0
HY	Compressor regulation differential in normal mode	[0.1°C to 25.0°C] [0.1°F to 45.0°F]	Set point differential. Compressor Cut-IN is T>SET+HY. Compressor Cut-OUT is T<=SET.	4.0
HYE	Compressor regulation differential in energy saving mode	[0.1°C to 25.0°C] [0.1°F to 45.0°F]	Set point differential in energy saving mode. Compressor Cut-IN is T>SET+HES+HYE. Compressor Cut-OUT is T<=SET+HES	4.0
HY1	Proportional regulation differential in normal mode	[0.1°C to 25.0°C] [0.1°F to 45.0°F]	Used when a second onoff compressor or a variable speed compressor is configured	4.0
HYS	Proportional regulation differential in energy saving mode	[0.1°C to 25.0°C] [0.1°F to 45.0°F]	Used when a second onoff compressor or a variable speed compressor is configured.	4.0
HYd	Deadband output regulation (oAx=db) differential	[0.1°C to 25.0°C] [0.1°F to 45.0°F]	Dead band output (oAx=db) is activated when T<SET-HYd	4.0
rAr	Delay between compressor and db output (oAx=db) activation and vice versa	0 to 255 min	Used to avoid anti short-cycling between compressor (oAx=CPx) and dead band outputs (oAx=db).	0
odS	Output activation delay at start-up	0 to 255 min	This function is enabled after the instrument power-on and delays the activation of the outputs.	0

AC	Anti-short cycle delay	0 to 999 s	Delay between first compressor (CP1) stop and the next restart.	1
AC1	Anti-short cycle delay (2nd compressor)	0 to 999 s	Delay between second compressor (CP2) stop and the next restart.	0
2dC	Activation delay for 2nd compressor	0 to 999 s	Activation delay, valid only for second onoff compressor	0
2CC	Activation mode for 2nd compressor	FUL(0); HAF(1)	FUL=delayed respect to main onoff compressor; HAF=step activation logic, par. HY1 is used.	FUL
2CE	Activation mode for 2nd compressor in Energy Saving	FUL(0); HAF(1)	FUL=delayed respect to main onoff compressor; HAF=step activation logic, par. HYS is used.	FUL
rCC	Enable compressor rotation	n(0); Y(1)	n=compressor 1 is activated always as first; Y= toggle compressor 1 and compressor 2 activation.	n
MCo	Maximum time with compressor on (0=disabled)	0 to 255 min	Define the maximum running time for onoff compressors.	0
tCE	Compressor ON time in Energy Saving (0 = disabled)	0 to 255 min	Define the maximum running time for a onoff compressors in energy saving mode.	0
tMr	Type of multiprobe regulation	nu(0); AvG(1); LoE(2); HiE(3)	Enable different methods for temperature regulation value: - AvG: weighted average value - LoE: minimum value through probe values - HiE: maximum value through probe values If tMr=nu, the value of probe P1 will be used.	nu
PA1	First probe used for calculating the regulation value	nP(0); P1(1); P2(2); P3(3); P4(4)	Select the first probe used for temperature regulation value	P1
PA2	Second probe used for calculating the regulation value	nP(0); P1(1); P2(2); P3(3); P4(4)	Select the second probe used for temperature regulation value	nP
PA3	Third probe used for calculating the regulation value	nP(0); P1(1); P2(2); P3(3); P4(4)	Select the third probe used for temperature regulation value	nP
PA4	Fourth probe used for calculating the regulation value	nP(0); P1(1); P2(2); P3(3); P4(4)	Select the fourth probe used for temperature regulation value	nP
C01	PA1 coefficient for average calculation	0 to 100	Set the coefficient to use with the first temperature probe (PA1) for weighted average calculation	100
C02	PA2 coefficient for average calculation	0 to 100	Set the coefficient to use with the first temperature probe (PA2) for weighted average calculation	0
C03	PA3 coefficient for average calculation	0 to 100	Set the coefficient to use with the first temperature probe (PA3) for weighted average calculation	0
C04	PA4 coefficient for average calculation	0 to 100	Set the coefficient to use with the first temperature probe (PA4) for weighted average calculation	0
CCt	Maximum duration for Pull Down	0.0 to 23h50min	When this interval ends, the Pull Down function is immediately stopped	00:00
CCS	Pull Down phase differential (SET+CCS or SET+HES+CCS)	[-12.0°C to 12.0°C] [-21.6°F to 21.6°F]	During any Pull Down, the regulation SETPOINT is moved to SET+CCS (in normal mode) or to SET+HES+CCS (in energy saving mode)	0.0
oHt	Threshold for automatic activation of Pull Down in normal mode (SET+HY+oHt)	[0.0°C to 25.0°C] [0.0°F to 45.0°F]	This is the upper limit used to automatically activate the Pull Down function	0.0
oHE	Threshold for automatic activation of Pull Down in energy saving mode (SET+HES+HYE+oHE)	[0.0°C to 25.0°C] [0.0°F to 45.0°F]	This is the upper limit used to automatically activate the Pull Down function in energy saving mode.	0.0

Con	Compressor ON time with faulty probe	0 to 255 min	Interval with compressor output ON in case of faulty regulation probe. With Con=0 compressor output is always OFF	1
CoF	Compressor OFF time with faulty probe	0 to 255 min	Interval with compressor output OFF in case of faulty regulation probe. With CoF=0 compressor output is always ON	1
Pdn	Enabling pump down	n(0); Y(1)	Use Pump Down logic before deactivating the compressor output.	n
Pdt	Pump down maximum duration	0 to 999 s	Safety limit for Pump Down logic.	0
PdA	Delay befor activating cyclic activation of the solenoid valve	0 to 999 s	Delay before activating a safety procedure and in case of any pump down failure.	0
CH	Type of regulation: Ht=heating; CL=cooling	CL(0); Ht(1)	Ht=heating; CL=cooling	CL

5.1.2 Probe configuration parameters – Prb

LABEL	DESCRIPTION	RANGE	MEANING	VALUE
P1C	Probe P1 selection	ntC(0); Pt1(1)	ntC= NTC probe; Pt1= PT1000 probe	ntC
P2C	Probe P2 selection	ntC(0); Pt1(1)	ntC= NTC probe; Pt1= PT1000 probe	ntC
P3C	Probe P3 selection	ntC(0); Pt1(1)	ntC= NTC probe; Pt1= PT1000 probe	ntC
P4C	Probe P4 selection	ntC(0); Pt1(1)	ntC= NTC probe; Pt1= PT1000 probe	ntC
ot	Probe P1 calibration	[-12.0°C to 12.0°C] [-21.6°F to 21.6°F]	Allows to adjust any possible offset of the probe P1.	0.0
P2P	Probe P2 presence	n(0); Y(1)	n = not present; Y = present	Y
oE	Probe P2 calibration	[-12.0°C to 12.0°C] [-21.6°F to 21.6°F]	Allows to adjust any possible offset of the probe P2.	0.0
P3P	Probe P3 presence	n(0); Y(1)	n = not present; Y = present	n
o3	Probe P3 calibration	[-12.0°C to 12.0°C] [-21.6°F to 21.6°F]	Allows to adjust any possible offset of the probe P3.	0.0
P4P	Probe P4 presence	n(0); Y(1)	n = not present; Y = present	n
o4	Probe P4 calibration	[-12.0°C to 12.0°C] [-21.6°F to 21.6°F]	Allows to adjust any possible offset of the probe P4.	0.0

5.1.3 Visualization parameters – diS

LABEL	DESCRIPTION	RANGE	MEANING	VALUE
CF	Temperature measurement unit: Celsius; Fahrenheit	°C(0); °F(1)	Select the measurement unit for temperature: °C = Celsius; °F = Fahrenheit	°C
rES	Temperature resolution: decimal, integer	dE(0); in(1)	Select the resolution for temperature: dE = decimal; in = integer	dE
Lod	Probe default displayed	P1(0); P2(1); P3(2); P4(3); SEt(4); dtr(5)	Px=probe “x”; Set=set point; dtr=probe visualization percentage.	P1
dLY	Temperature display delay (resolution 10 sec)	0.0 to 20min00s	Visualization filter used when the temperature increases: the display is updated of 1°C or 1°F after dLY interval.	00:00

5.1.4 Defrost configuration parameters – dEF

LABEL	DESCRIPTION	RANGE	MEANING	VALUE
EdF	Defrost mode	rtC(0); in(1)	Define the defrost timed control: in=fixed intervals; rtC=following real time clock	in
tdF	Defrost type: electric heating, hot gas	EL(0); in(1)	Define the defrost mode: EL=electrical heaters; in=hot gas	in

dFP	Probe selection for defrost control	nP(0); P1(1); P2(2); P3(3); P4(4)	nP=no probe; Px=probe “x”	P2
dSP	Probe selection for 2nd defrost control	nP(0); P1(1); P2(2); P3(3); P4(4)	nP=no probe; Px=probe “x”	nP
dtE	End defrost temperature	[-50.0°C to 50.0°C] [-58.0°F to 122.0°F]	Define the temperature threshold, measured by the evaporator probe (dFP), which causes the end of current defrost cycle	12.0
dtS	End 2nd defrost temperature	[-50.0°C to 50.0°C] [-58.0°F to 122.0°F]	Define the temperature threshold, measured by the evaporator probe (dSP), which causes the end of current defrost cycle	0.0
idF	Interval between two successive defrost cycles	0 to 255 hours	Determines the time interval between the beginning of two defrosting cycles. Valid when EdF=in.	10
MdF	Maximum length of defrost cycle	0 to 255 min	When dFP=nP (no evaporator probe presence) it sets the defrost duration. When dFP=Px (defrost end based on temperature measured by probe Px) it sets the maximum length for the defrost cycle. If PxP=n (probe not present or not configured) MdF works as defrost duration.	30
MdS	Maximum length of 2nd defrost cycle	0 to 255 min	When dSP=nP (no evaporator probe presence) it sets the second defrost duration. When dSP=Px (defrost end based on temperature measured by probe Px) it sets the maximum length for the defrost cycle. If PxP=n (probe not present or not configured) MdS works as defrost duration.	0
dSd	Start defrost delay	0 to 999 s	A fixed delay is applied to any manual defrost activation	0
StC	Compressor off-cycle before starting any defrost	0 to 255 s	Interval with compressor OFF before activating any hot gas defrost cycle	0
dFd	Displaying during defrost	rt(0); it(1); SEt(2); dEF(3); Coo(4)	rt = show always the real temperature; it = show always the start defrost temperature; SEt = show always the Setpoint value; dEF = show the label “dEF”; Coo = show the label “dEF” during defrost and the label “Coo” after defrost and draining until T>SET+HY	dEF
dAd	Temperature display delay after any defrost cycle	0 to 255 min	delay before updating the temperature on the display after the end of any defrost.	0
Fdt	Draining time	0 to 255 min	during a draining phase the regulation is stopped.	0
Htt	Type fo regulation for heater elements (par. HEt)	nu(0); dEF(1); tiM(2) dor(3)	Define the type of logic for output HEt (heater elements): - nu = not used - dEF = output HEt activated during any defrost. After any defrost the output HEt activation will follow par. Hon. - tiM = timed activation. Independent from regulations (par. Hon not used) - dor = output HEt activated during any dor opening event. Independent from regulations (par. Hon not used)	nU
tHE	ON and OFF periods for heater elements	0 to 255 s	Define the period for heater element activation and deactivation.	0
Hon	Drain heater enabled after draining time (par. Fdt)	0 to 255 min	The relative output will stay on after draining time. Used only after a defrost phase.	0
dPo	Defrost cycle enebled at stat-up	n(0); Y(1)	Enables a defrost at power on	n
HYP	Differential temperature during any pre-defrost phase	[-12.0°C to 12.0°C] [-21.6°F to 21.6°F]	Move the regulation setpoint to the value SET-HYP during dAF interval	0.0
Pd2	Defrost output deactivation delay	0 to 255 s	Delay the defrost output deactivation	2

dAF	Pre-defrost time	0 to 255 min	Interval for pre-defrost function	2
dAP	Defrost delay after every Pull Down	0 to 999 min	Avoid unwanted defrost activation after a Pull Down	0
od1	Automatic defrost (at the beginning of any energy saving)	n(0); Y(1)	n=function disabled; Y=function enabled	n
od2	Optimized defrost	n(0); Y(1)	n=function disabled; Y=function enabled	n
dSt	Temperature sampling time during an optimized defrost (valid only if od2=yes)	1 to 255 s	Timed control of the evaporator temperature. Used only with od2=Y	1
dt1	Differential temperature for latent heating control	0.1°C to 1.0°C	Timed control of the evaporator temperature. Used only with od2=Y.	0.1
dt2	Delta=Troom-Tevap, used if od2=Y	[0.1°C to 25.5°C] [0.1°F to 45.0°F]	Optimized defrost deactivation threshold.	0.2
dEt	End defrost by time alarm	n(0); Y(1)	Warning alarm to inform that the latest defrost ended by time.	n
dE3	End defrost by time alarm visualization	n(0); Y(1)	n=only the modbus status is set; Y="dEt" label on the display, alarm outputs and buzzer activated.	n

5.1.5 Evaporator and condenser fan configuration parameters – Fan

LABEL	DESCRIPTION	RANGE	MEANING	VALUE
FAP	Probe selection for evaporator fan	nP(0); P1(1); P2(2); P3(3); P4(4)	nP=no probe; Px=probe “x”	P2
FSt	Evaporator fan stop temperature	[-50.0°C to 50.0°C] [-58.0°F to 122.0°F]	Evaporator fan will stop when the measured temperature (from probe FAP) is T>FSt.	2.0
HYF	Evaporator fan regulator differential	[0.1°C to 25.0 °C] [0.1°F to 45.0°F]	Evaporator fan will start when the measured temperature (from probe FAP) is T<FSt-HYF.	10.0
oFE	Offset for evaporator fan activation and deactivation	[0.0°C to 25.0 °C] [0.0°F to 45.0°F]	Change the evaporator fan cut-in and cut-out	0.0
oF2	Evaporator fan offset in energy saving	[-12.0°C to 12.0°C] [-21.6°F to 21.6°F]	Change the evaporator fan cut-in and cut-out when in energy saving	0.0
FnC	Evaporator fan operating mode	C_n(0); O_n(1); C_Y(2); O_Y(3)	• Cn = runs with the compressor, duty-cycle when compressor is OFF (see FoF, Fon, FF1 and Fo1 parameters) and OFF during defrost • on = continuous mode, OFF during defrost • CY = runs with the compressor, duty-cycle when compressor is OFF (see FoF, Fon, FF1 and Fo1 parameters) and ON during defrost • oY = continuous mode, ON during defrost	O_n
Fnd	Evaporator fan delay after defrost cycle	0 to 255 min	Delay before evaporator fan activation after any defrosts.	0
FCt	Differential temperature for cyclic activation of evaporator fans (0=disabled)	[0°C to 50°C] [0°F to 90°F]	Used to reduce anti short-cycling for evaporator fans.	0
FSU	Evaporator fan operating mode	Std(0); FoF(1); Fon(2)	Std = standard mode, evaporator fan follows par FnC; Fon = evaporator Fan always on; FoF = evaporator fan always off	FoF
Ft	Evaporator fan controlled during defrost	n(0); Y(1)	n = evaporator fan follows par. FnC during any defrost; Y = evaporator fan regulator is active during any defrost	n
Fon	Evaporator fan ON time in normal mode (with compressor OFF)	0 to 255 min	Used in normal mode. Interval with evaporator fan forced ON when compressor is OFF.	0
FoF	Evaporator fan OFF time in normal mode (with compressor OFF)	0 to 255 min	Used in normal mode. Interval with evaporator fan forced OFF when compressor is OFF.	0

Fo1	Evaporator fan ON time in energy saving (with compressor OFF)	0 to 255 min	Used in energy saving. Interval with evaporator fan forced ON when compressor is OFF.	0
FF1	Evaporator fan OFF time in energy saving (with compressor OFF)	0 to 255 min	Used in energy saving. Interval with evaporator fan forced OFF when compressor is OFF.	0
Fd1	Evaporator fan delay	0 to 255 s	Delay before activating evaporator fan	0
Fd2	Evaporator fan delay after closing door	0 to 255 s	Delay before activating evaporator fan and after closing the door	0
FnU	Number of motion detections before forcing evaporator fans at FMS	0 to 10	Evaporator fan speed reduction at FMS after Fnu motion detections.	0
FMS	Evaporator fan speed after Fnu motion detections	0 to 100 %	Evaporator fan speed after Fnu motion detections.	0
Fti	Evaporator fans operating at FMS	0 to 255 min	Interval with evaporator fan speed forced at FMS. 0 = function disabled.	0
LA1	Maintenance interval for evaporator fans (tens of hours)	0 to 999	A maintenance message “LA1” will appear on the display after LA1*10 hours	0
rS1	Maintenance function reset	n(0); Y(1)	Select Y and confirm to reset the maintenance message.	n
FAC	Probe selection for condenser fan	nP(0); P1(1); P2(2); P3(3); P4(4)	nP=no probe; Px=probe “x”	nP
St2	Set Point 2 Regulation (for condenser fan)	[-100.0°C to 150.0°C] [-148.0°F to 302.0°F]	Condenser fan will stop when the measured temperature (from probe FAC) is T<St2.	0.0
HY2	Set Point 2 differential (for condenser fan)	[0.1°C to 25.0°C] [0.1°F to 45.0°F]	Condenser fan will start when the measured temperature (from probe FAC) is T>St2+HY2.	0.1
oFC	Offset for condenser fan activation and deactivation	[0.0°C to 25.0 °C] [0.0°F to 45.0°F]	Offset used for proportional control (condenser fan controlled through analogue output).	0.0
FCC	Condenser fan operating mode	C_n(0); O_n(1); C_Y(2); O_Y(3)	• Cn = runs with the compressor and OFF during defrost • on = continuous mode, OFF during defrost • CY = runs with the compressor and ON during defrost • oY = continuous mode, ON during defrost	O_n
Fd3	Condenser fan activation delay	0 to 255 s	Delay before activating condenser fan	0
Fd4	Condenser fan deactivation delay	0 to 255 s	Delay before deactivating condenser fan	0
LA2	Maintenance interval for Condenser fan (tens of hours)	0 to 999	A maintenance message “LA2” will appear on the display after LA2*10 hours	0
rS2	Maintenance function reset for Condenser fan	n(0); Y(1)	Select Y and confirm to reset the maintenance message.	n
iAE	Interval between air extraction fan activation	0.0 to 24h00min (144)	Interval between two consecutive activation of the extraction fans	00:00
tAE	Air extraction fan running time	0 to 999 min	Interval with extraction fan ON	0

5.1.6 Auxiliary regulator parameters – AUS

LABEL	DESCRIPTION	RANGE	MEANING	VALUE
ACH	Type of control for auxiliary regulator	CL(0); Ht(1)	CL = regulator works as "cooling"; Ht = regulator works as "heating"	CL
SAA	Set point for auxiliary regulator	[-100.0°C to 150.0°C] [-148.0°F to 302.0°F]	Define the temperature set point to switch the auxiliary relay.	35.0
SHY	Auxiliary regulator differential	[0.1°C to 25.0°C] [0.1°F to 45.0°F]	Differential for auxiliary output set point: • ACH=CL, AUX Cut in is [SAA+SHY]; AUX Cut out is SAA. • ACH=Ht, AUX Cut in is [SAA–SHY]; AUX Cut out is SAA.	0.1

ArP	Probe selection for auxiliary regulator	nP(0); P1(1); P2(2); P3(3); P4(4)	nP = no probe, the auxiliary relay is switched only by the digital input; Px=probe “x”.	nP
Sdd	Auxiliary regulator disabled during any defrost cycle	n(0); Y(1)	n = the auxiliary relay operates during defrost. Y = the auxiliary relay is switched off during defrost	n
btA	Base time for parameters Ato and AtF	SEC; Min	SEC = base time is in second; Min = base time is in minutes.	SEC
Ato	Interval of time with auxiliary output ON	0 to 255 s/min	Auxiliary output ON time (with base time defined by par. btA)	0
AtF	Interval of time with auxiliary output OFF	0 to 255 s/min	Auxiliary output OFF time (with base time defined by par. btA)	0

5.1.7 Dynamic set point for condenser fan – dYn

LABEL	DESCRIPTION	RANGE	MEANING	VALUE
dSi	Reference probe for dynamic Set Point	nP(0); P1(1); P2(2); P3(3); P4(4)	nP = no probe, the regulation is deactivated; Px=probe “x” is used for dynamic set point calculation.	nP
dSS	Dynamic Set Point value	[-100.0°C to 150.0°C] [-148.0°F to 302.0°F]	Used to change dynamically the condenser fan cut-in and cut-out	5.0
dSb	Range dynamic Set Point	[-50.0°C to 50.0°C] [-90.0°F to 90.0°F]	Range for dynamic set point variation	40.0
dSH	Dynamic Set Point differential	[-50.0°C to 50.0°C] [-90.0°F to 90.0°F]	Magnitude for dynamic set point variation	2.0

5.1.8 Alarm configuration parameters - ALr

LABEL	DESCRIPTION	RANGE	MEANING	VALUE
ALP	Probe selection for temperature alarms	nP(0); P1(1); P2(2); P3(3); P4(4)	nP=no probe; Px=probe “x”	P1
ALC	Temperature alarms configuration: relative, absolute	rE(0); Ab(1)	Type of alarm threshold: Ab = absolute; rE = relative (to the Setpoint)	Ab
ALU	High temperature alarm	°C[0.0° to 50.0° o ALL to 150.0°] °F[0.0° to 90.0° o ALL to 302.0°]	When this temperature is reached, the alarm is enabled after the ALd delay time. • If ALC=Ab: ALL to 150.0°C or ALL to 302°F. • If ALC=rE: 0.0 to 50.0°C or 0 to 90°F	150.0
ALL	Low temperature alarm	°C[0.0° to 50.0° o ALL to 150.0°] °F[0.0° to 90.0° o ALL to 302.0°]	When this temperature is reached, the alarm is enabled after the ALd delay time. • If ALC=Ab: -100.0°C to ALU or -148°F to ALU. • If ALC=rE: 0.0 to 50.0°C or 0 to 90°F.	-100.0
AFH	Temperature alarm differential	[0.1°C to 25.0°C] [0.1°F to 45.0°F]	Differential for alarm deactivation	2.0
ALd	Temperature alarm delay	0 to 255 min	Delay between the detection of an alarm condition and the relative alarm signaling.	10
dot	Temperature alarm delay with open door	0.0 to 24min00s	Delay between the detection of a door open condition and the relative alarm signaling.	00:00
dAo	Temperature alarm delay at start-up	0.0 to 24h00min	Delay between the detection of a temperature alarm condition and the relative alarm signaling at power-on.	00:00
AP2	Probe selection for 2nd temperature alarm	nP(0); P1(1); P2(2); P3(3); P4(4)	nP=no probe; Px=probe “x”.	nP
AU1	Pre-alarm threshold for 2nd temperature alarm (absolute value)	[-100.0°C to 150.0°C] [-148.0°F to 302.0°F]	Warning alarm threshold, message “AU1” is visualized on the display	10.0
AH1	2nd high temperature pre-alarm differential	[0.1°C to 25.0°C] [0.1°F to 45.0°F]	Differential for pre-alarm deactivation.	1.0

Ad1	2nd high temperature pre-alarm delay	0 to 255 min	Delay between the detection of any pre-alarm condition and the relative alarm signaling	5
AL2	2nd low temperature alarm	[-100.0°C to 150.0°C] [-148.0°F to 302.0°F]	Lower threshold for second temperature alarm.	-100.0
AU2	2nd high temperature alarm	[-100.0°C to 150.0°C] [-148.0°F to 302.0°F]	Upper threshold for second temperature alarm.	150.0
AH2	2nd temperature alarm differential	[0.1°C to 25.0°C] [0.1°F to 45.0°F]	Differential for second alarm deactivation.	5.0
Ad2	2nd temperature alarm delay	0 to 255 min	Delay between the detection of any alarm condition and the relative alarm signaling	0
dA2	2nd temperature alarm delay at start-up	0.0 to 24h00min	Delay between the detection of the second temperature alarm condition and the relative alarm signaling at power-on.	00:00
bLL	Compressor OFF due to 2nd low temperature alarm	n(0); Y(1); MAn(2)	n = the compressor continues to work; Y = the compressor is switched off while the alarm is ON; MAn=a device reset (cycle power or stand-by) is required to reset this alarm.	n
AC2	Compressor OFF due to 2nd high temperature alarm	n(0); Y(1); MAn(2)	n = the compressor continues to work; Y = the compressor is switched off while the alarm is ON; MAn=a device reset (cycle power or stand-by) is required to reset this alarm.	n
dE2	2nd temperature alarm disabled after any defrost and relative dripping phase	nu(0); dEF(1); drA(2)	Avoid unwanted temperature alarms during any defrost phase	n
SAF	Differential for anti-freezing control	[0.0 to 25.5°C] [0.0 to 45.0°F]	Safety control. The regulation is stopped if T< SET - SAF	0.0
bAt	RTC low level battery	0 to 100%	Set the low level battery. A warning alarm on the display, with the label "bAt", will inform it is time to change the battery.	90
tPG	Timer before locking regulation and due to gas leakage	0 to 999 s	Safety control. The regulation is stopped in case of any gas leakage.	0
Lou	Outputs to disable in case of gas leakage alarm	nu(0); FAn(1)	Safety control. Define if and which outputs must be stopped in case of any gas leakage.	nu
iSn	Sanitization interval between two consecutive activations	0.0 to 24h00min	Cyclic activation of any sanitization output	00:00
tSn	Sanitization interval	0.0 to 24h00min	Duration for sanitization function	00:00
tEM	Trapped man alarm alarm from motion sensor	0 to 255 min	Additional safety control to monitor human presence inside the cold room with door closed. It needs a motion sensor (X-MOD) properly configured.	0
tSF	Interval with regulation stopped and/or with light outputs forced ON after motion detection.	0 to 255 min	Additional safety control to lock regulation and switch on the interior lights.	0
tbA	Alarm relay deactivation	n(0); Y(1)	n = it is not possible to deactivate a digital output set as an alarm output; Y = it is possible to deactivate both the buzzer and the digital output set as an alarm output.	n
EdA	Temperature alarm inhibition after any defrost	0 to 255 min	All temperature alarms are disabled for interval EdA after any defrost.	0
ESA	Temperature alarm inhibition after any energy saving mode activation or deactivation	0 to 255 min	All temperature alarms are disabled for interval ESA after any defrost. Valid only in energy saving mode.	0

5.1.9 Digital output configuration parameters – out

LABEL	DESCRIPTION	RANGE	MEANING	VALUE
oA1	Relay output oA1 configuration	nu(0); CP1(1); dEF(2); FAn(3); ALr(4); ALM(5); LiG(6); AUS(7); db(8); onF(9); HES(10); Cnd(11); CP2(12); dF2(13); FA2(14); HEt(15); inv(16); EFn(17); So1(18); SAn(19)	nu=not used; CP1=onoff compressor 1; dEF=defrost; Fan=evaporator fan; Alr=alarm; LiG=light; AUS=auxiliary relay; db=neutral zone; onF=always ON with instrument ON; HES=energy saving; Cnd=condenser fan; CP2=second onoff compressor; dF2=second defrost; HEt=heater control; inV=inverter output; EFn=air extraction fan; So1=solenoid valve; SAn=sanitization	CP1
oA2	Relay output oA2 configuration	nu(0); CP1(1); dEF(2); FAn(3); ALr(4); ALM(5); LiG(6); AUS(7); db(8); onF(9); HES(10); Cnd(11); CP2(12); dF2(13); FA2(14); HEt(15); inv(16); EFn(17); So1(18); SAn(19)	nu=not used; CP1=onoff compressor 1; dEF=defrost; Fan=evaporator fan; Alr=alarm; LiG=light; AUS=auxiliary relay; db=neutral zone; onF=always ON with instrument ON; HES=energy saving; Cnd=condenser fan; CP2=second onoff compressor; dF2=second defrost; HEt=heater control; inV=inverter output; EFn=air extraction fan; So1=solenoid valve; SAn=sanitization	dEF
oA3	Relay output oA3 configuration	nu(0); CP1(1); dEF(2); FAn(3); ALr(4); ALM(5); LiG(6); AUS(7); db(8); onF(9); HES(10); Cnd(11); CP2(12); dF2(13); FA2(14); HEt(15); inv(16); EFn(17); So1(18); SAn(19)	nu=not used; CP1=onoff compressor 1; dEF=defrost; Fan=evaporator fan; Alr=alarm; LiG=light; AUS=auxiliary relay; db=neutral zone; onF=always ON with instrument ON; HES=energy saving; Cnd=condenser fan; CP2=second onoff compressor; dF2=second defrost; HEt=heater control; inV=inverter output; EFn=air extraction fan; So1=solenoid valve; SAn=sanitization	Fan
oA4	Relay output oA4 configuration	nu(0); CP1(1); dEF(2); FAn(3); ALr(4); ALM(5); LiG(6); AUS(7); db(8); onF(9); HES(10); Cnd(11); CP2(12); dF2(13); FA2(14); HEt(15); inv(16); EFn(17); So1(18); SAn(19)	nu=not used; CP1=onoff compressor 1; dEF=defrost; Fan=evaporator fan; Alr=alarm; LiG=light; AUS=auxiliary relay; db=neutral zone; onF=always ON with instrument ON; HES=energy saving; Cnd=condenser fan; CP2=second onoff compressor; dF2=second defrost; HEt=heater control; inV=inverter output; EFn=air extraction fan; So1=solenoid valve; SAn=sanitization	Cnd
oA5	Relay output oA5 configuration	nu(0); CP1(1); dEF(2); FAn(3); ALr(4); ALM(5); LiG(6); AUS(7); db(8); onF(9); HES(10); Cnd(11); CP2(12); dF2(13); FA2(14); HEt(15); inv(16); EFn(17); So1(18); SAn(19)	nu=not used; CP1=onoff compressor 1; dEF=defrost; Fan=evaporator fan; Alr=alarm; LiG=light; AUS=auxiliary relay; db=neutral zone; onF=always ON with instrument ON; HES=energy saving; Cnd=condenser fan; CP2=second onoff compressor; dF2=second defrost; HEt=heater control; inV=inverter output; EFn=air extraction fan; So1=solenoid valve; SAn=sanitization	LiG
oA6	Relay output oA6 configuration	nu(0); CP1(1); dEF(2); FAn(3); ALr(4); ALM(5); LiG(6); AUS(7); db(8); onF(9); HES(10); Cnd(11); CP2(12); dF2(13); FA2(14); HEt(15); inv(16); EFn(17); So1(18); SAn(19)	nu=not used; CP1=onoff compressor 1; dEF=defrost; Fan=evaporator fan; Alr=alarm; LiG=light; AUS=auxiliary relay; db=neutral zone; onF=always ON with instrument ON; HES=energy saving; Cnd=condenser fan; CP2=second onoff compressor; dF2=second defrost; HEt=heater control; inV=inverter output; EFn=air extraction fan; So1=solenoid valve; SAn=sanitization	ALr

AoP	Alarm relay polarity	OP(0); CL(1)	oP = alarm activated by opening the contact; CL = alarm activated by closing the contact	CL
LoF	Light output OFF when in stand-by	n(0); Y(1)	n=light output status unchanged after stand-by. Y=light output switched off after stand-by.	Y
LAU	Light output ON after power-on	n(0); Y(1)	n=light output unchanged; Y=light output forced ON.	n
1An	Type of analogue output 1	nu(0); PuL(1); FrE(2)	nu=not used. PuL=PWM ouput for evaporator fan speed modulation. This will use a phase-cut modulation. FrE=frequency output with fixed duty cycle (50%) and variable frequency. This is used for variable speed compressors.	nu

1Ao	Analogue output 1 configuration	nu(0); tiM(1); FAn(2); Cnd(3); AUS(4); ALr(5); inv(6); vAL(7); HEt(8); EFn(9); SAn(10)	nu=not used;
			tiM=timed, the output will change between min and MAX value following Ato and AtF value respectively;
			FAn=following evaporator fan regulator;
			Cnd=following condenser fan regulator;
			AUS=following auxiliary regulator;
			ALr=following any alarm condition;
			inv=used for inverter;
			vAL=fixed value;
			HEt=following heater elements logic;
			EFn=following air extraction fan logic;
			SAn=following sanitization logic;
				nu

1oL	Minimum value for analogue output 1	0 to 100%	Minimum value for analogue output 1	0
1oH	Maximum value for analogue output 1	0 to 100%	Maximum value for analogue output 1	100
1At	Interval with analogue output 1 forced at its maximum value	0 to 255 s	Enabled after any activation, this is the interval with the analogue output 1 forced at 100%.	5
MA1	Functional mode for analogue output 1	Std(0); StP(1)	Std=standard; StP=fixed steps, defined by LLx parameters, in cycling mode. If 1Ao=LiG, EFn, vAL, the relative output value will change between LL1 and LL4 by pressing a button configured as bxC,bxF=StP.	Std
1on	Interval with analogue output 1 ON	0 to 999 s	Analogue output ON with cyclic mode (valid if 1Ao=tiM)	0
1oF	Interval with analogue output 1 OFF	0 to 999 s	Analogue output OFF with cyclic mode (valid if 1Ao=tiM)	0
1AS	Fixed value for analogue output 1	0 to 100%	Select a fixed value fot analogue output (valid when 1Ao=vAL)	50
2An	Type of analogue output 2	nu(0); 010(1); 420(2)	nu = not used 010 = 1-10Vdc analogue output 420 = 4-20mA analogue output	nu

2Ao	Analogue output 2 configuration	nu(0); tiM(1); FAn(2); Cnd(3); AUS(4); ALr(5); inv(6); vAL(7); HEt(8); EFn(9); SAn(10); LiG(11)	nu=not used;
			tiM=timed, the output will change between min and MAX value following Ato and AtF value respectively;
			FAn=following evaporator fan regulator;
			Cnd=following condenser fan regulator;
			AUS=following auxiliary regulator;
			ALr=following any alarm condition;
			inv=used for inverter;
			vAL=fixed value;
			HEt=following heater elements logic;
			EFn=following air extraction fan logic;
			SAn=following sanitization logic;
			LiG=light modulation
				nu

2oL	Minimum value for analogue output 2	0 to 100%	Select the minimum value for the range of the analogue output 2	0
2oH	Maximum value for analogue output 2	0 to 100%	Select the maximum value for the range of the analogue output 2	100
2At	Interval with analogue output 2 forced at its maximum value	0 to 255 s	Enabled after any activation, this is the interval with the analogue output 2 forced at 100%.	5
MA2	Functional mode for analogue output 2	Std(0); StP(1)	Std=standard; StP=fixed steps, defined by LLx parameters, in cycling mode. If 2Ao=LiG, EFn, vAL, the relative output value will change between LL1 and LL4 by pressing a button configured as bxC,bxF=StP.	Std
2on	Interval with analogue output 2 enabled (valid if xAo=tiM)	0 to 999 s	Define the interval with analogue output ON (valid if2Ao=tiM)	0
2oF	Interval with analogue output 2 disabled (valid if xAo=tiM)	0 to 999 s	Define the interval with analogue output OFF (valid if2Ao=tiM)	0
2AS	Forced value for analogue output 2	0 to 100%	Analogue output value fixed at 2AS value until controller is ON.	50
LL1	Level 1	0 to 100%	Fixed level 1 for analogue output configured as MAx=StP	0
LL2	Level 2	0 to 100%	Fixed level 2 for analogue output configured as MAx=StP	33
LL3	Level 3	0 to 100%	Fixed level 3 for analogue output configured as MAx=StP	66
LL4	Level 4	0 to 100%	Fixed level 4 for analogue output configured as MAx=StP	100
oEM	Test mode activation	n(0); Y(1)	Outputs can be activated and deactivated with modbus commands. When enabled, the regulators nevre change on the output status.	n

5.1.10 Digital input configuration parameters – inP

LABEL	DESCRIPTION	RANGE	MEANING	VALUE
i1t	Base times for digital input 1	SEC(0); Min(1)	SEC = seconds; Min = minutes. Delay in activating the function linked to the digital inputs.	SEC
i1P	Digital input 1 polarity	OP(0); CL(1)	oP = activated by opening the contact; CL = activated by closing the contact.	CL

i1F	Digital input 1 configuration	nu(0); dor(1); dEF(2); AUS(3); EAL(4); bAL(5); PAL(6); ES(7); FAn(8); HdF(9); onF(10); LiG(11); CC(12); EMt(13); LPS(14); CLn(15); GAS(16); StC(17); SAn(18); tPA(19)	• nu=not used • dor = door switch function • dEF = defrost activation • AUS = auxiliary output • ES = energy saving mode activation • EAL = external warning alarm • bAL = external lock alarm • PAL = external pressure alarm • FAn = evaporator fan control • HdF = holiday defrost • onF = ON/OFF status change • LiG = light output control • CC = pull down activation • EMt = X-MOD motion detection sensor • MAP = reload factory default configuration (for the used parameter map) • SAn = Sanitization • EFn = Air extraction fan activation	EAL
d1d	Digital inputs 1 alarm delay (base time depends on par. ixt)	0 to 255 min/s	Delay between the detection of an external event and the activation of the relative function.	0
i2t	Base times for digital input 2	SEC(0); Min(1)	SEC = seconds; Min = minutes. Delay in activating the function linked to the digital inputs.	SEC
i2P	Digital input 2 polarity	OP(0); CL(1)	oP = activated by opening the contact; CL = activated by closing the contact.	CL
i2F	Digital input 2 configuration	nu(0); dor(1); dEF(2); AUS(3); EAL(4); bAL(5); PAL(6); ES(7); FAn(8); HdF(9); onF(10); LiG(11); CC(12); EMt(13); LPS(14); CLn(15); GAS(16); StC(17); SAn(18); tPA(19)	• nu=not used • dor = door switch function • dEF = defrost activation • AUS = auxiliary output • ES = energy saving mode activation • EAL = external warning alarm • bAL = external lock alarm • PAL = external pressure alarm • FAn = evaporator fan control • HdF = holiday defrost • onF = ON/OFF status change • LiG = light output control • CC = pull down activation • EMt = X-MOD motion detection sensor • MAP = reload factory default configuration (for the used parameter map) • SAn = Sanitization • EFn = Air extraction fan activation	bAL
d2d	Digital inputs 2 alarm delay (base time depends on par. ixt)	0 to 255 min/s	Delay between the detection of an external event and the activation of the relative function.	0
nPS	Number of external pressure switch alarms before stopping the regulation	0 to 15	After reaching nPS events in the digital input alarm delay (par. dxd), the regulation will be stopped and a manual restart (ON/OFF, power OFF and power ON) will be required	15
odC	Compressor and fan status after door opening	no(0); FAn(1); CPr(2); F-C(3)	no = no regulation lockout; FAn = Fan OFF; CPr = Compressor OFF; F-C = Compressor and fan OFF	F-C
rrd	Regulation restart after door alarm	n(0); Y(1)	n = no regulation restart if the door is open; Y = when the rrd timer elapses, the regulation restarts even if a door open alarm is ON	Y
CLi	Light output activation from door input	n(0); Y(1)	n=light output unchanged after door opening; Y=light output activation after door opening.	Y
LCi	Time with light output forced ON (0=function disabled)	0 to 255 min	Interval with light output ON. 0=function disabled.	10

n01	Number of motion detections before activating the function set by par. MSF.	0 to 10	Amount of motion detection events, in the interval t01, before activating the logic defined by par. MSF.	0
t01	Measurement interval of the number of events set.	0 to 255 min	Set the measurement interval of the number of events (par. n01) needed to activate the logic defined by par. MSF. If t01=0 the function is disabled.	0
MSF	Motion sensor working mode	nu(0); LiG(1); FAn(2); C-F(3); ALL(4)	Not used yet. Next version will implement safety trapped man function nu = motion sensor not used LiG = motion sensor controls the light outputs FAn = motion sensor controls the evaporator fans C-F = motion sensor controls compressor and evaporator fans ALL = motion sensor controls light outputs and lock regulation	n
EMF	Temporary disabling of the light output activation from motion detection.	0 to 255 min	Reading inhibition interval after switching off the light output by means of a button or serial command (valid if ixF=EMt)	0
ECL	Air extraction fan activated when cleaning function is ON	n(0); Y(1)	Automatic air extraction fan activation with clean function enabled	n

5.1.11 Energy saving configuration parameters – ES

LABEL	DESCRIPTION	RANGE	MEANING	VALUE
HES	Temperature differential in energy saving	[-30.0°C to 30.0°C] [-54.0°F to 54.0°F]	Differential to add to the Setpoint during the Energy Saving cycle.	0.0
LdE	Light output control in energy saving	n(0); Y(1)	Y = light outputs off when energy saving mode is active	n

5.1.12 Counters, read only values – Cnt

LABEL	DESCRIPTION	RANGE	MEANING	
n1H	Number of activations for relay output oA1 (thousands of) - Read Only	---	Total number of relay oA1 activations. This value is saved into controller memory.	
n1L	Number of activations for relay output oA1 (units of) - Read Only	---	Total number of relay oA1 activations. This value is saved into controller memory.	
n2H	Number of activations for relay output oA2 (thousands of) - Read Only	---	Total number of relay oA2 activations. This value is saved into controller memory.	
n2L	Number of activations for relay output oA2 (units of) - Read Only	---	Total number of relay oA2 activations. This value is saved into controller memory.	
n3H	Number of activations for relay output oA3 (thousands of) - Read Only	---	Total number of relay oA3 activations. This value is saved into controller memory.	
n3L	Number of activations for relay output oA3 (units of) - Read Only	---	Total number of relay oA3 activations. This value is saved into controller memory.	
n4H	Number of activations for relay output oA4 (thousands of) - Read Only	---	Total number of relay oA4 activations. This value is saved into controller memory.	
n4L	Number of activations for relay output oA4 (units of) - Read Only	---	Total number of relay oA4 activations. This value is saved into controller memory.	

n5H	Number of activations for relay output oA5 (thousands of) - Read Only	---	Total number of relay oA5 activations. This value is saved into controller memory.	
n5L	Number of activations for relay output oA5 (units of) - Read Only	---	Total number of relay oA5 activations. This value is saved into controller memory.	
n6H	Number of activations for relay output oA6 (thousands of) - Read Only	---	Total number of relay oA6 activations. This value is saved into controller memory.	
n6L	Number of activations for relay output oA6 (units of) - Read Only	---	Total number of relay oA6 activations. This value is saved into controller memory.	
n7d	Number of daily activations of digital input 1 - Read Only	---	Daily number of digital input 1 activations. This value is saved into controller memory.	
n7H	Number of total activations of digital input 1 (thousand of) - Read Only	---	Total number of digital input 1 activations. This value is saved into controller memory.	
n7L	Number of total activations of digital input 1 (units of) - Read Only	---	Total number of digital input 1 activations. This value is saved into controller memory.	
n8d	Number of daily activations of digital input 2 - Read Only	---	Daily number of digital input 2 activations. This value is saved into controller memory.	
n8H	Number of total activations of digital input 2 (thousand of) - Read Only	---	Total number of digital input 2 activations. This value is saved into controller memory.	
n8L	Number of total activations of digital input 2 (units of) - Read Only	---	Total number of digital input 2 activations. This value is saved into controller memory.	
F1H	Number of working hours for relay output oA1 (thousands of) - Read Only	---	Total number of working hours for relay oA1. This value is saved into controller memory.	
F1L	Number of working hours for relay output oA1 (units of) - Read Only	---	Total number of working hours for relay oA1. This value is saved into controller memory.	
F2H	Number of working hours for relay output oA2 (thousands of) - Read Only	---	Total number of working hours for relay oA2. This value is saved into controller memory.	
F2L	Number of working hours for relay output oA2 (units of) - Read Only	---	Total number of working hours for relay oA2. This value is saved into controller memory.	
F3H	Number of working hours for relay output oA3 (thousands of) - Read Only	---	Total number of working hours for relay oA3. This value is saved into controller memory.	
F3L	Number of working hours for relay output oA3 (units of) - Read Only	---	Total number of working hours for relay oA3. This value is saved into controller memory.	
F4H	Number of working hours for relay output oA4 (thousands of) - Read Only	---	Total number of working hours for relay oA4. This value is saved into controller memory.	
F4L	Number of working hours for relay output oA4 (units of) - Read Only	---	Total number of working hours for relay oA4. This value is saved into controller memory.	
F5H	Number of working hours for relay output oA5 (thousands of) - Read Only	---	Total number of working hours for relay oA5. This value is saved into controller memory.	
F5L	Number of working hours for relay output oA5 (units of) - Read Only	---	Total number of working hours for relay oA5. This value is saved into controller memory.	

F6H	Number of working hours for relay output oA6 (thousands of) - Read Only	---	Total number of working hours for relay oA6. This value is saved into controller memory.	
F6L	Number of working hours for relay output oA6 (units of) - Read Only	---	Total number of working hours for relay oA6. This value is saved into controller memory.	
rSd	Daily counters reset	n(0); Y(1)	Reset command for all daily counters	
rSC	Total counters reset	n(0); Y(1)	Reset command for all total counters	

5.1.13 Real Time Clock configuration parameters – rtC

LABEL	DESCRIPTION	RANGE	MEANING	
HUr	Hours - Read Only	---	Real time clock: hour value	
Min	Minutes - Read Only	---	Real time clock: minutes value	
dAY	Day of the week - Read Only	---	Real time clock: day of the week value	
dYM	Day of the month - Read Only	---	Real time clock: calendar day value	
Mon	Month - Read Only	---	Real time clock: month value	
YAr	Year - Read Only	---	Real time clock: year value	
Hd1	First day of weekend	Sun(0) to SAt(6); nu(7)	Select the first day of the weekend	nu
Hd2	2nd day of weekend	Sun(0) to SAt(6); nu(7)	Select the second day of the weekend	nu
iLE	Energy saving cycle starting time on working days	0.0 to 23h50min; nu(144)	Select the beginning of the energy saving mode on working days.	00:00
dLE	Energy saving cycle duration on working days	0.0 to 24h00min	Select the duration of the energy saving mode on working days.	00:00
iSE	Energy saving cycle starting time on weekends	0.0 to 23h50min; nu(144)	Select the beginning of the energy saving mode on weekends.	00:00
dSE	Energy saving cycle duration on weekends	0.0 to 24h00min	Select the duration of the energy saving mode on weekends.	00:00
tSA	Sanitization cycle starting time on working days	0.0 to 23h50min; nu(144)	sets the sanitization starting time on working days	00:00
dSA	Sanitization cycle duration on working days	0.0 to 24h00min	sets the duration of the sanitization cycle on working days.	00:00
HSt	Sanitization cycle starting time on weekends	0.0 to 23h50min; nu(144)	sets the sanitization starting time on weekend	00:00
HSd	Sanitization cycle duration on weekends	0.0 to 24h00min	sets the duration of the sanitization cycle on weekend.	00:00
dd1	Sunday defrost	n(0); Y(1)	Enable the Ld1 to Ld6 defrost operation on Sunday	n
dd2	Monday defrost	n(0); Y(1)	Enable the Ld1 to Ld6 defrost operation on Monday	n
dd3	Tuesday defrost	n(0); Y(1)	Enable the Ld1 to Ld6 defrost operation on Tuesday	n
dd4	Wednesday defrost	n(0); Y(1)	Enable the Ld1 to Ld6 defrost operation on Wednesday	n
dd5	Thursday defrost	n(0); Y(1)	Enable the Ld1 to Ld6 defrost operation on Thursday	n
dd6	Friday defrost	n(0); Y(1)	Enable the Ld1 to Ld6 defrost operation on Friday	n
dd7	Saturday defrost	n(0); Y(1)	Enable the Ld1 to Ld6 defrost operation on Saturday	n
Ld1	1st defrost starting time	0.0 to 23h50min; nu(144)	sets the beginning of the first programmable defrost cycle.	nu
Ld2	2nd defrost starting time	0.0 to 23h50min; nu(144)	sets the beginning of the second programmable defrost cycle.	nu

Ld3	3rd defrost starting time	0.0 to 23h50min; nu(144)	sets the beginning of the third programmable defrost cycle.	nu
Ld4	4th defrost starting time	0.0 to 23h50min; nu(144)	sets the beginning of the fourth programmable defrost cycle.	nu
Ld5	5th defrost starting time	0.0 to 23h50min; nu(144)	sets the beginning of the fifth programmable defrost cycle.	nu
Ld6	6th defrost starting time	0.0 to 23h50min; nu(144)	sets the beginning of the sixth programmable defrost cycle.	nu

5.1.14 Memory storage management – E2

LABEL	DESCRIPTION	RANGE	MEANING	VALUE
MAP	Current configuration	C-1(0); C-2(1)	to change configuration (parameter map) used	
LdM	Restoring default setting	n(0); Y(1)	select Y and confirm to reload factory default values for the configuration currently used.	
rHA	MAX and Min values reset for HACCP functions (valid if .eMiMa=1)	n(0); Y(1)	select Y and confirm to reset the memorized min and MAX temperature values (HACCP function must be enabled).	

5.1.15 Serial Communication port configuration parameters – CoM

LABEL	DESCRIPTION	RANGE	MEANING	VALUE
Adr	Serial address for COM1	1 to 247	device address for Modbus communication	1
bAU	Baudrate for COM1	9.6(0); 19.2(1); 38.4(2); 57.6(3); 115(4)	select the correct baudrate for serial communication	9.6
PAr	Parity control for COM1	no(0); odd(1); EvE(2)	no=no parity control; odd=odd parity control; EvE=even parity control	n
FM	Operating Mode for COM1	std(0); ro(1)	Std = standard mode, both read and write commands are enabled ro = read only value. No write commands are enabled.	Std

5.1.16 User Interface configuration parameters – Ui

LABEL	DESCRIPTION	RANGE	MEANING	VALUE
SC0	Automatic keyboard lock	0 to 255 s	Delay before keyboard lock activation	0
SC1	Status icon visualization in Home screen	n(0); Y(1)	Icon visualization in HOME screen	Y
SC4	Special functions menu enabled	n(0); Y(1)	Enable FUNCTION menu	Y
SC5	User interface timeout	1 to 255 s	Timeout for function and menu exit	60
SC8	Quick menu enabled	n(0); Y(1)	Enable INFO menu	Y
SC9	“oFF” label in stand-by	n(0); Y(1)	Show the OFF label when in stand-by. OFF label is visualized 1 sec out of 10 sec.	Y
bPt	Confirmation time for SET button	S(short)=1s; L(Long)=3s	Sets the confirmation time through SET button	S
bS	Alarm Sound Level	n(0); Y(1)	Buzzer enabled (for alarm indication)	Y
bSb	Keyboard Sound Level	0 to 3	Sound level for keyboard	1
PSU	Password for level Pr2	0 to 999	insert a value to protect all the parameters set on the level Pr2 from modification	0
b1C	Button 1 configuration	nu(0); LiG(1); ES(2)	nu = not used; LiG =light output control ES = energy saving mode control	LiG
b6C	Button 6 configuration	nu(0); onF(1)	nu = not used onF = stand-by mode	onF

b1t	Button 1 timed (3sec) configuration	nu(0); LiG(1); ES(2); AUS(3); SAn(4); StP(5); MAP(6)	nu = not used LiG = light output control ES = energy saving mode control AUS = auxiliary output control SAn = sanitization mode control StP = step mode control MAP = parameter map change	LiG
b2t	Button 2 timed (3sec) configuration	nu(0); dEF(1); SAn(2); CLn(3)	nu = not used dEF = defrost control SAn = sanitization mode control CLn = clean mode control	dEF
b3t	Button 3 timed (3sec) configuration	nu(0); EFn(1); CCt(2); StP(3)	nu = not used EFn = air extraction fan control CCt = pull down activation StP = step mode control	nu
b5t	Button 5 timed (3sec) configuration	nu(0); EFn(1); MAP(2); CLn(3)	nu = not used EFn = air extraction fan control MAP = parameter map change CLn = clean mode control	nu
b6t	Button 6 timed (3sec) configuration	nu(0); onF(1); ES(2); AUS(3); SAn(4)	nu = not used onF = stand-by mode ES = energy saving mode control AUS = auxiliary output control SAn = sanitization mode control	nu
b1F	Button 1 enabled in stand-by	n(0); Y(1)	The relative function is enable also in stand-by mode	n
b2F	Button 2 enabled in stand-by	n(0); Y(1)	The relative function is enable also in stand-by mode	n

5.1.17 Information, read only parameters – inF

LABEL	DESCRIPTION	RANGE	MEANING	VALUE
P1	Probe P1 value - Read Only	---	Probe 1 real time value	
P2	Probe P2 value - Read Only	---	Probe 2 real time value	
P3	Probe P3 value - Read Only	---	Probe 3 real time value	
P4	Probe P4 value - Read Only	---	Probe 4 real time value	
di1	Digital input 1 status - Read Only	---	Digital input 1 real time status	
di2	Digital input 2 status - Read Only	---	Digital input 2 real time status	
Ao1	Analogue output 1 value - Read Only	---	Analogue output 1 real time value	
Ao2	Analogue output 2 value - Read Only	---	Analogue output 2 real time value	
rSE	Real regulation Set Point (SET + HES + SETd) - Read Only	---	Real regulation Setpoint. This value take into consideration other status or function activated such as Energy Saving mode.	
FdY	Firmware release date: day - Read Only	---	Official release date	
FMn	Firmware release date: month - Read Only	---	Official release date	
FYr	Firmware release date: year - Read Only	---	Official release date	
rEL	Firmware release - Read Only	---	Official release version	
SUb	Firmware sub release - Read Only	---	Official release sub-version	

Ptb	Parameter map version - Read Only	---	Official release for parameter map	

6. REGULATION

6.1 REGULATION TEMPERATURE CALCULATION

Up to 4 different temperature probes can be used to calculate the regulation temperature value.

- **PAx (x=1,2,3,4):** select the temperature probes to use
- **tMr:** define the type of multi probe regulation
  - **nu:** not used, the probe P1 will be used for temperature regulation
  - **AvG:** weigthed average calculation
  - **LoE:** the minimum value among the available ones is used
  - **HiE:** the maximum value among the available ones is used
- **C0x**: coefficient “x” to apply to relative probe “x” for weigthed average calculation and when **tMr≠nu**

6.1.1 SPECIAL CONDITIONS

- If probe **PAx (x=1,2,3,4)=nP** the relative temperature probe is not considered
- If probe **PAx (x=1,2,3,4) is in error** the relative temperature probe is not considered
- If probe **C0x (x=1,2,3,4)=0** the relative temperature probe is not considered
- If all selected probes for calculating the regulation temperature value are in error, the compressor output will be controlled following par. **Con** and **CoF**.

6.2 SINGLE ONOFF COMPRESSOR

6.2.1 COOLING ACTION

The regulation is based on the temperature measured by the regulation temperature value with a positive differential respect to the set point.

- **T > SET+HY**: output **oAx=CP1** activation
- **T < SET**: output **oAx=CP1** deactivation

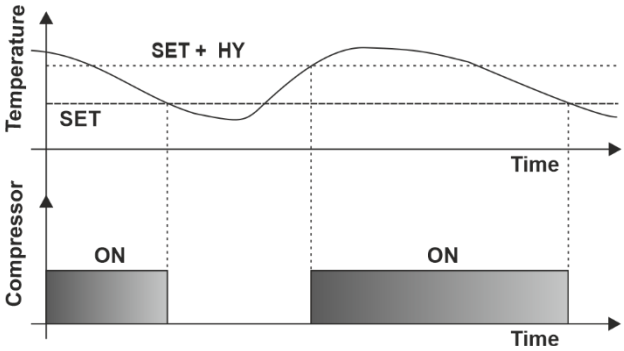

6.2.2 HEATING ACTION

The regulation is based on the temperature measured by the regulation temperature value with a negative differential respect to the set point.

- **T < SET-HY**: output **oAx=CP1** activation
- **T > SET**: output **oAx=CP1** deactivation

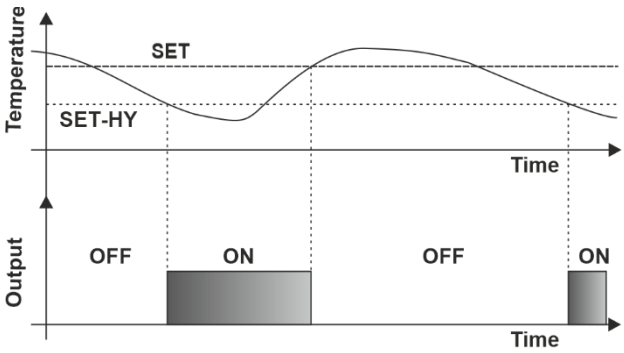

6.2.3 DEAD BAND

The regulation is based on the temperature measured by the regulation temperature value with a couple of differentials respect to the set point.

- **T > SET+HY**: cooling output activation
- **T < SET**: cooling output deactivation
- **T < SET-HYd**: output **oAx=db** activation
- **T > SET**: output **oAx=db** deactivation

Par. **rAr** set a delay between cooling and heating output activations and vice-versa.

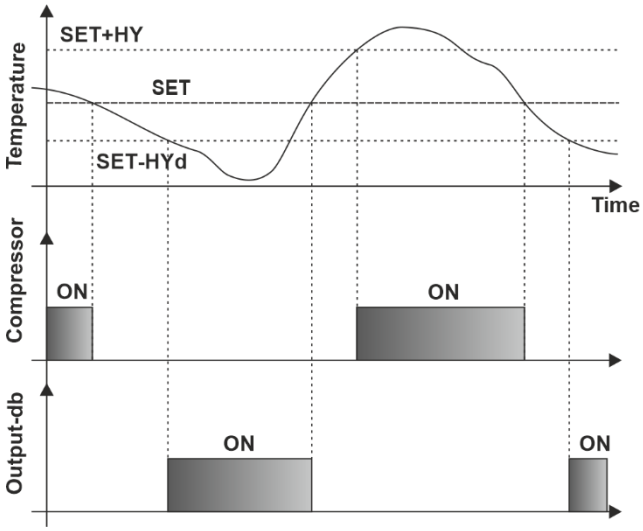

7. DOUBLE ONOFF COMPRESSOR

This regulation can be activated when **oAx=CP1** and **oAy=CP2** and is valid only for ONOFF compressor type.

7.1 NORMAL MODE LOGIC

The controller is able to manage applications where a couple of ONOFF compressors are used. The available logic allows:

- To use a step logic (par. **2CC=HAF**) for the second compressor activation
- To use a parallel logic (par. **2CC=FUL**) for second compressor activation

Some delays are implemented to guarantee the right time between two consecutives compressor activation or between first and second compressor activation.
Rotation function (par. **rCC**) can be activated to equalize number of working hours of both compressors.

7.1.1 STEP LOGIC – 2CC=HAF

The par. **2CC = HAF** enables step logic:

- The first compressor (based on the rotation sequence) will be activated when **T > SET+HY1**.
- The second compressor (based on the rotation sequence) will be activated when **T > SET+HY+HY1**. Moreover, par. **2dc** sets a delay between the activation of the first and the second compressor.

The deactivation logic follows:

- The second compressor (according to the rotation sequence) is switched off when the temperature drops below: **T < SET+HY**
- The first compressor (according to the rotation sequence) is switched off when the temperature drops below: **T < SET**
- Every compressor stop will load the relative anti-short cycle timer (par. **AC** or **AC1**).

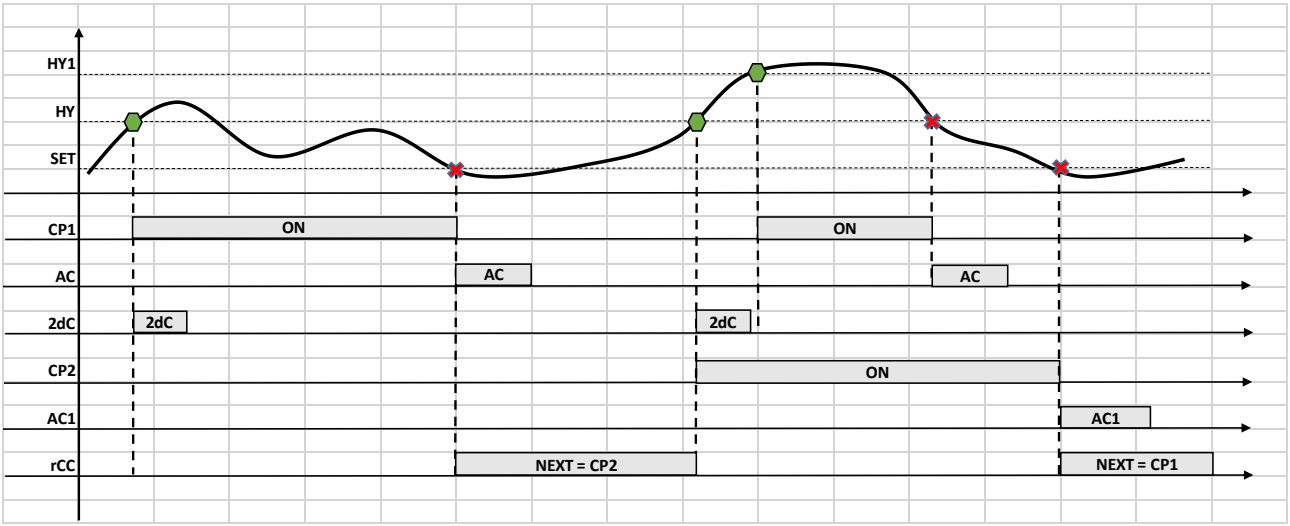

7.1.2 PARALLEL LOGIC – 2CC=FUL

The par. **2CC = FUL** enables parallel logic:

- The first compressor (based on the rotation sequence) will be activated when **T > SET+HY1**.
- The second compressor (based on the rotation sequence) will be activated when delay **2dc** expires.

The deactivation logic follows:

- Both compressors are switched off when the temperature drops below: **T < SET**
- Every compressor stop will load the relative anti-short cycle timer (par. **AC** or **AC1**).

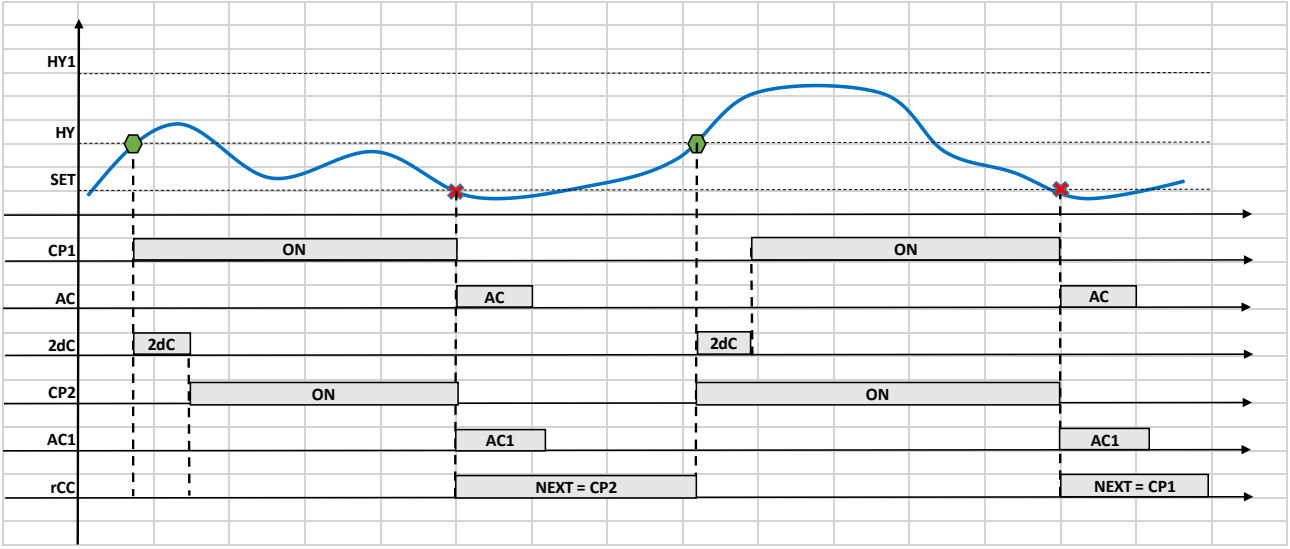

7.2 ENERGY SAVING MODE LOGIC

The controller is able to manage applications where a couple of ONOFF compressors are used. The available logic allows:

- To use a step logic (par. **2CE=HAF**) for the second compressor activation
- To use a parallel logic (par. **2CE=FUL**) for second compressor activation

Some delays are implemented to guarantee the right time between two consecutives compressor activation or between first and second compressor activation.
Rotation function (par. **rCC**) can be activated to equalize number of working hours of both compressors.
Par. **tCE** define the maximum time with only one compressor ON and before forcing also second compressor ON.

7.2.1 STEP LOGIC – 2CE=HAF

The par. **2CE = HAF** enables step logic:

- The first compressor (based on the rotation sequence) will be activated when **T > SET_ES+HYE**.
- The compressor switch (first compressor OFF and second compressor ON after **2dc**) will be activated if during **tCE** interval the regulation temperature never gone over **T > SET_ES+HYE+HYS**.

- The second compressor (based on the rotation sequence) will be immediately activated (after **2dc**) if regulation temperature goes over **T > SET_ES+HYE+HYS** during t**CE** interval.

The deactivation logic follows:

- Both compressors are switched off when the temperature drops below: **T < SET_ES**
- Every compressor stop will load the relative anti-short cycle timer (par. **AC** or **AC1**).

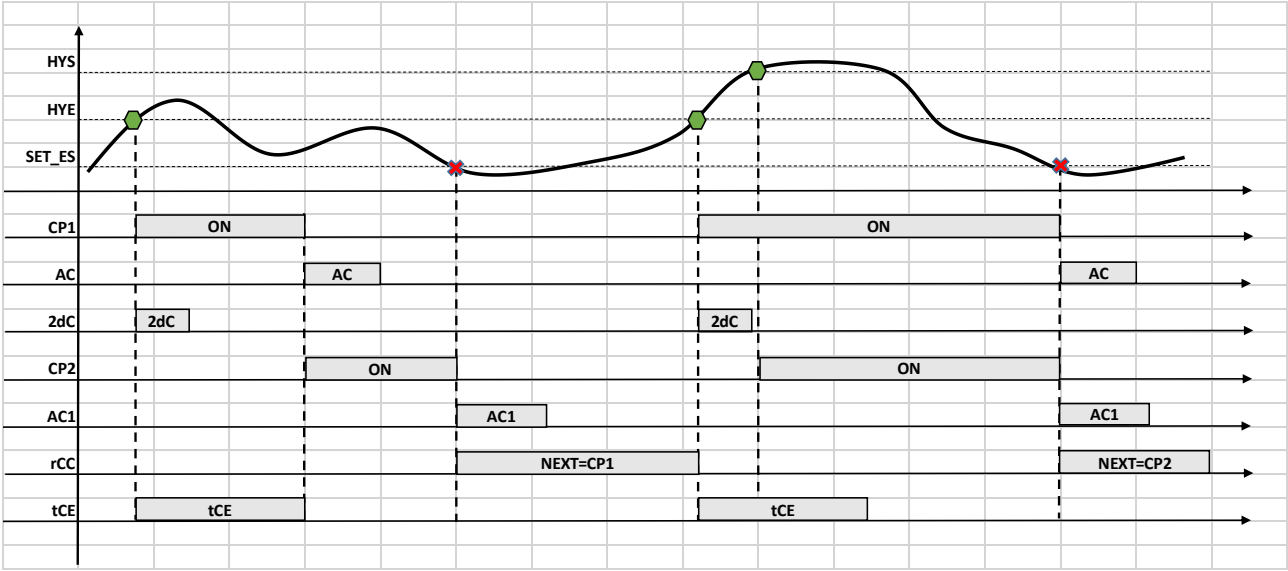

7.2.2 PARALLEL LOGIC – 2CE=FUL

The par. **2CE = FUL** enables parallel logic:

- The first compressor (based on the rotation sequence) will be activated when **T > SET_ES+HYE**.
- The second compressor (based on the rotation sequence and after **2dc**) will be activated after **tCE** interval if the regulation temperature is **SET_ES < T < SET_ES+HYE+HYS**.
- The second compressor (based on the rotation sequence and after **2dc**) will be immediately activated if regulation temperature goes over **T > SET_ES+HYE+HYS** during t**CE** interval.

The deactivation logic follows:

- Both compressors are switched off when the temperature drops below: **T < SET_ES**
- Every compressor stop will load the relative anti-short cycle timer (par. **AC** or **AC1**).

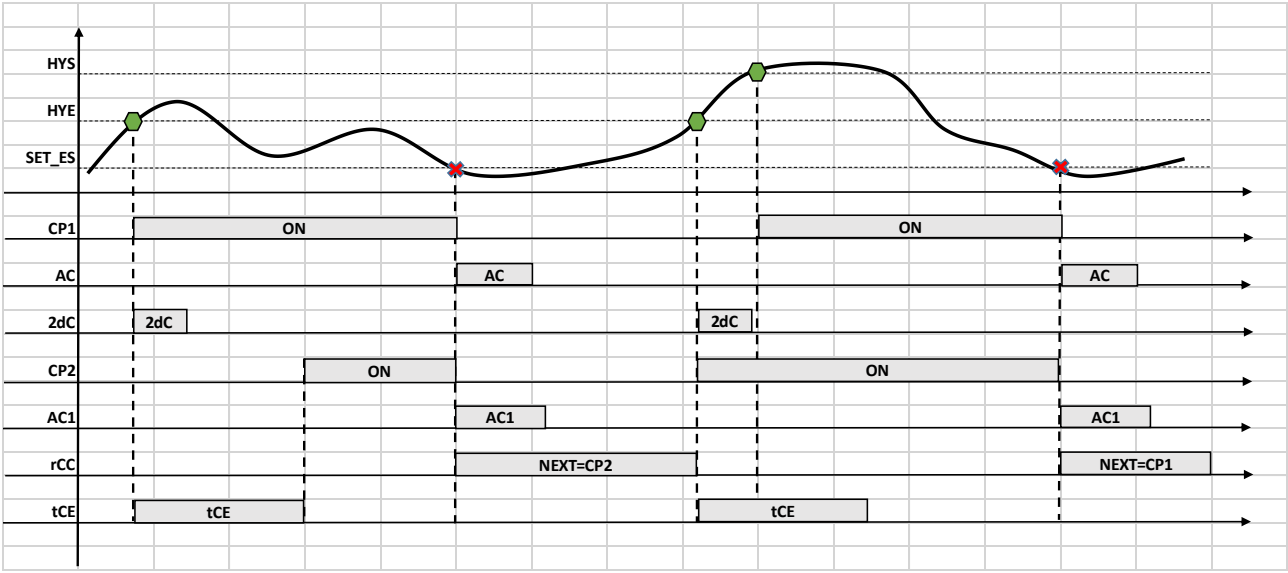

8. PUMP DOWN

PUMP DOWN function requires the following parameters to be properly configured:

- **oAx (x=1,2,3…)=CP1 or CP2**: a digital output set as “compressor” output
- **oAy (y=1,2,3…)=So1**: a digital output set as “solenoid valve” output

- **Pdn=Y**: to enable the PUMP DOWN logic
- **Pdt>0**: maximum time for PUMP DOWN function
- **ixF (X=1,2)=LPS**: low pressure contact to stop the PUMP DOWN
- **PdA>0**: delay before signaling low pressure contact failure

8.1 PUMP DOWN MAXIMUM DURATION - Pdt

This safety control acts in case of any low pressure control activation failure. As soon as T<=SET the counter starts. After counter reachs **Pdt**, the PUMP DOWN function will be stopped. In this case:

- A blinking “Pdt” label will be displayed
- Normal regulation is not stopped
- Buzzer is not activated
- Alarm output is not activated
- Modbus status is activated

8.2 PUMP DOWN DEACTIVATION FAILURE - PdA

This safety control acts in case of any low pressure control deactivation failure. As soon as T>SET the counter starts. After counter reachs **PdA**, the normal regulation will start. In this case:

- A blinking “PdA” label will be displayed
- Normal regulation is not stopped
- Buzzer is activated
- Alarm output is activated
- Modbus status is activated

8.3 SPECIAL CONDITIONS

Condition for compressor off	Solenoid valve status with Pdn=no	Solenoid valve status with Pdn=Yes
Delay **AC**, **AC1** or **2dC**	Both compressor and solenoid valve ON after delay	Follows Pump Down logic. Both compressor and solenoid valve ON after delay.
Maximum compressor ON time (par. **MCo**)	Both compressor and solenoid valve OFF.	A Pump Down will be forced.
Door opening input with compressor OFF logic	Both compressor and solenoid valve OFF.	A Pump Down will be forced.
Lock alarm	Both compressor and solenoid valve OFF.	Both compressor and solenoid valve OFF. Pump down not executed.
Temperature alarm2 with compressor OFF logic	Both compressor and solenoid valve OFF.	Both compressor and solenoid valve OFF. Pump down not executed.
Delay **odS > 0**	Both compressor and solenoid valve ON after delay	Both compressor and solenoid valve ON.
Electric defrost	Both compressor and solenoid valve OFF.	A Pump Down will be forced.
Hot gas defrost delay activation (par. **StC >=0** and/or par. **dSd >= 0**)	Both compressor and solenoid valve OFF.	Par **StC=0** and/or par. **dSd=0**: compressor and solenoid valve stay ON. Pump Down not executed. Par **StC>0** and par. **dSd>0**: compressor OFF and solenoid valve ON. Pump Down not executed.
Dripping time after any hot gas defrost	Both compressor and solenoid valve OFF.	Both compressor and solenoid valve OFF. Pump down not executed.
Timer **CoF>0** and when regulatin probe error	Both compressor and solenoid valve OFF.	Both compressor and solenoid valve OFF. Pump down not executed.

9. PULL DOWN

The Pull Down is automatically activated:
- After any defrost cycle
- After power-on if **T>SET+CCS**
- When the regulation probe temperature **T** is:
    - **T>SET+HY+oHt** value in normal mode
    - **T>SET+HES+HYE+oHE** value in energy saving mode

In these cases, a different set-point value (**SET+CCS**) will be used. As soon as the room temperature reaches the **SET+CCS** value, the compressor will stop and the normal regulation will restart.
NOTE:
- Pull Down function is disabled when **CCS=0** or **CCt=0**.
- The **CCt** parameter sets the maximum activation time for any pull down. When **CCt** expires, the Pull Down will be immediately stopped and the standard SET-POINT will be restored.

10. ENERGY SAVING

The standard SET-POINT (**SET**) is used to maintain the temperature at a certain value when the energy saving status (ES) is not active. On the other hand, when the ES status is active a different SET-POINT (**SET_ES**), higher than the standard one, will be used. The parameter **HES** defines the energy setpoint according to the following formula: **SET_ES = SET + HES**
There are also two different differential values for **SET** and **SET_ES**, which are used for compressor cut-in and cut-out: when ES status is active, the **HYE** parameter will be used instead of the **HY** parameter.
Par. **LdE** manages light outputs during energy saving. **LdE=Y** means light output OFF when energy saving mode is active.

11. DEFROST OPERATIONS

Any defrost operation can be controlled in the following way:
- **EdF=rtC**: by using an internal real-time clock (only for models equipped with RTC)
- **EdF=in**: timed defrost, in this case a new defrost will start as soon as the idF timer elapses

11.1 DEFROST MODE

Two defrost modes are available: timed or controlled by a temperature probe. A couple of parameters are required to control intervals between defrost cycles (**idF**) and maximum duration (**MdF**). During a defrost cycle it is possible to select some different visualizations by using the par. **dFd**. Available defrost types are:
- **tdF=EL**: with an electric heater
- **tdF=in**: by using hot gas cycle

11.2 TIMED OR INTERVAL DEFROST

The defrost interval depends on the presence of the RTC (optional). The internal RTC is controlled by means of the **EdF** parameter:
- **EdF=in:** the defrost is made every **idF** time – standard way for controller without RTC.
- **EdF=rtC:** the defrost is real time controlled, depending on the day enabled in the parameters **dd1**…**dd7** and the hours set in the parameters **Ld1...Ld6**.

Other parameters are used to control defrosting cycles: the maximum length (**MdF**) and defrosting modes: timed or controlled by the evaporator's probe (**P2P**).
At the end of defrost dripping time is started, its length is set in the **Fdt** parameter. With **Fdt=0** the dripping time is disabled.

11.3 AUTOMATIC DEFROST

It is possible to automatically start a defrost as soon as the energy saving mode is activated. To do this, set par. **od1=Y**.

11.4 ELECTRIC DEFROST

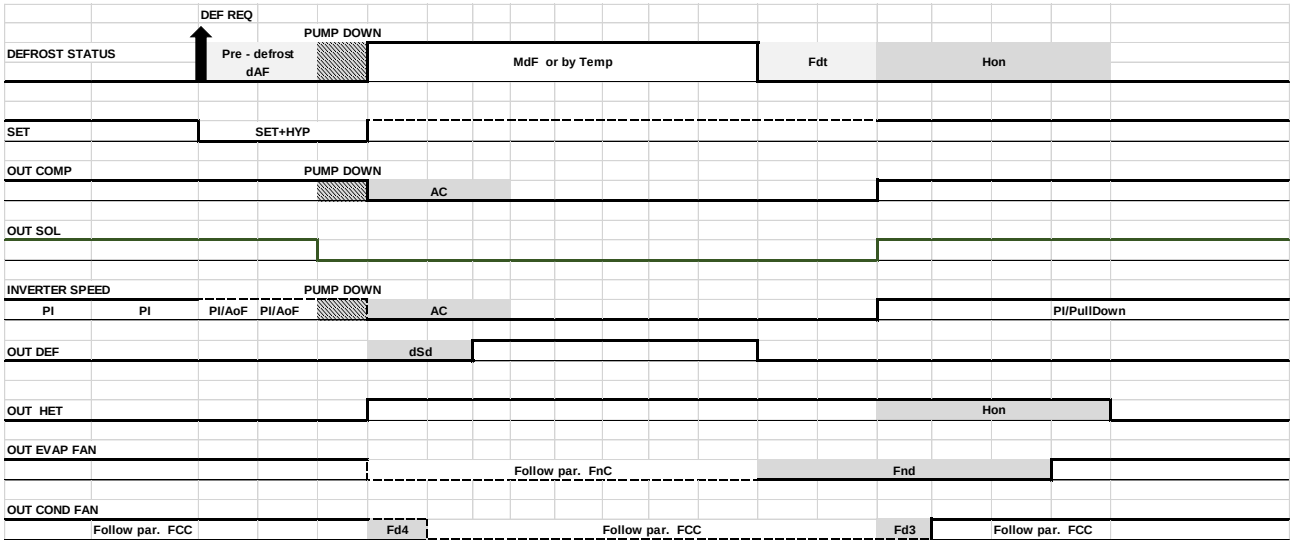

11.5 HOT GAS DEFROST

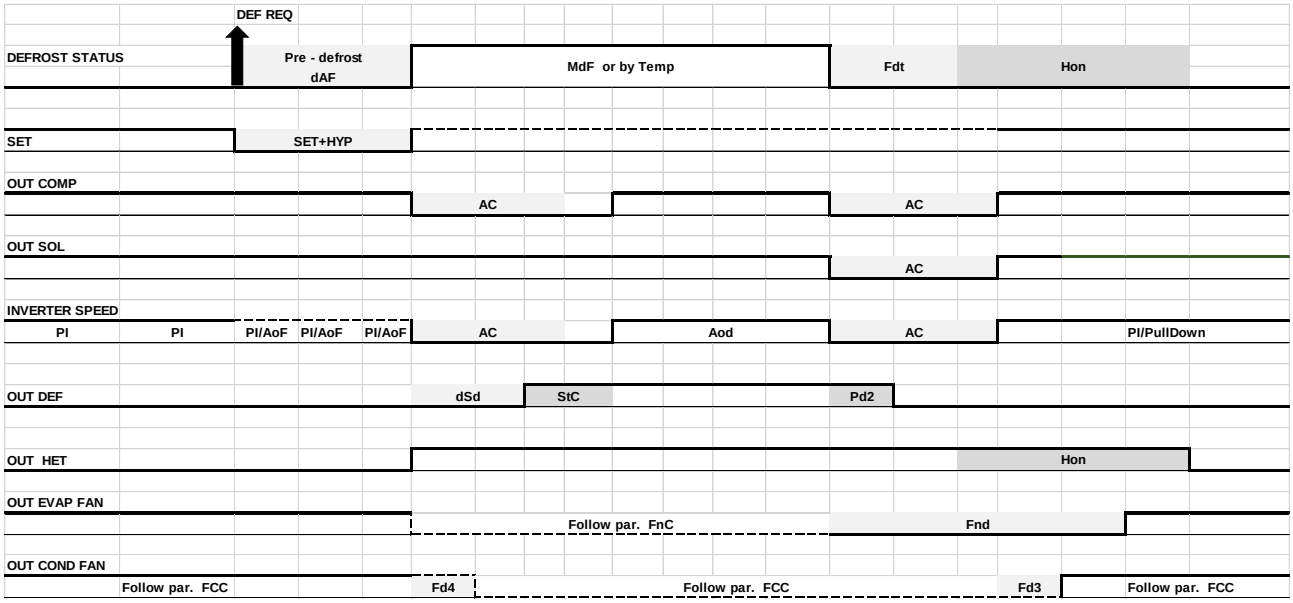

11.6 DOUBLE PROBE DEFROST CONTROL

To use this function, set the following parameters:

- **MdF>0**
- **MdS=0**
- Probe **dFP≠nu**
- Probe **dSP≠nu**

The defrost will be activated when at least one of the two probes (par. **dFP** and **dSP**) measures a temperature lower than its end defrost set point (par. **dtE** and **dtS**). The defrost will end when both probes measure a temperature higher than their end defrost set point (par. **dtE** and **dtS**). If one of the two probes is not present or is in error, the defrost will depend on the other probe (if present and functioning). If both probes are in error or not properly set, the defrost will end by time (par. **MdF**).

11.7 DEFROST WITH DOUBLE EVAPORATOR CONTROL

To use this function, set the following parameters:

- **MdF>0**
- **MdS>0**
- Probe **dFP≠nu**
- Probe **dSP≠nu**

The defrost will be activated when at least one of the two probes measures a temperature lower than its end defrost set point (par. **dtE** and **dtS**). The following parameters are available for defrosting of each evaporator:

	EVAPORATOR 1	EVAPORATOR 2
End defrost set	par. **dtE**	par. **dtS**
Defrost timeout	par. **MdF**	par. **MdS**
Evaporator probe	par. **dFP**	par. **dSP**
Digital output	Relay **oAx=dEF**	Relay **oAy=dF2**

The first defrost output (**oAx=dEF**) musto be used with the first evaporator, while the second defrost output (**oAy=dF2**) must be used with the second evaporator. The end of the defrost occurs when the temperatures of both evaporators reaches the end defrost set point, or due to the timeout of both counters **MdF** and **MdS**.

11.8 DEFROST WITH EVAPORATOR ICE PRESENCE CONTROL

This function needs the presence of a temperature probe to control the end defrost temperature and to set par. **od2=Y**. If no probe is set, then operation will be timed (par. **MdF**). When the end defrost temperature probe is present and configured, then at the beginning of each defrost the relative relays will be activated (defrost relay, if electric, defrost relay and compressor if hot-gas). During the defrost phase, the temperature will be monitored to detect the latent heat phase (this condition is the melting of the ice present without increasing the evaporator temperature). If the **MdF** time expires before the end defrost condition occurs, the **MdF** timer will be reloaded: this means that the maximum time for a defrost phase is equal to **2 * MdF**. At the end of the second **MdF** interval, the defrost in progress will be terminated in any case. If the defrost end control probe reaches the defrost end temperature, the defrost in progress will be immediately interrupted and the dripping phase started.

11.9 DISPLAY VISUALIZATION DURING ANY DEFROST PHASE

The par. **dFd** permits to change the display visualization:

- **dFd = rt**: real time temperature
- **dFd = it**: temperature at the beginning of the current defrost
- **dFd = SEt**: set point value used during the current defrost phase
- **dFd = dEF**: label “dEF” during the current defrost phase
- **dFd = Coo**: label “dEF” during the current defrost phase and label “Coo” during dripping phase.

If **dAd > 0**, the visualization will use the following rules:

- **dFd = rt**: temperature according to par. **Lod**
- **dFd = it, SEt, dEF**: the minor value between the start defrost temperature and the current one.
- **dFd = Coo**:
    - Label “Coo” if **T>=SET+HY** (or **T>=SET+HES+HYE** if energy saving mode)
    - Real temperature (according to par. **Lod**) if **T<SET+HY** (or **T<SET+HES+HYE** if energy saving mode)

11.10 HEATER ELEMENT CONTROL

This function can be used for:

- Avoid freezing of the door gasket in low temperature applications by activating a heating resistance.
- Deicing the dripping pipes during any defrost phase

The function requires:

- A relay set as **oAx=HEt**
- An analogue output (optional) set as **xAo=HEt**
- A timer (par. **tHE**) for the cyclical activation of the **HEt** outputs

The **HEt** outputs can be controlled with par. **Htt**:

- **Htt = nu**: function disabled
- **Htt = dEF**: activation of the output only during the pre-defrost, defrost and post-defrost (dripping phases).
- **Htt = tiM**: cyclical activation defined by par. **tHE** (ON and OFF cycles of equal duration and equal to par. **tHE**). During the energy saving phases, the **HEt** output is activated for 60 sec every 10 min. At the end of each energy saving interval, the **HEt** output is activated for 120 sec and then the cyclical activation defined by par. **tHE** restarts (with first cycle OFF). During any defrost phase the output **HEt** does not follow par. **dAF** and **Hon**, but keep on cycling.

- **Htt = dor**: in addition to the cyclical activation defined by par. **tHE**, the **HEt** output is forced active for 120 sec after each door opening. At the expiration of 120 seconds, the cyclical activation defined by par. **tHE** restarts (with first cycle OFF). During the energy saving phases the **HEt** output is activated for 60 sec every 10 min. At the end of each energy saving interval, the **HEt** output is activated for 120 sec and then the the cyclical activation defined by par. **tHE** restarts (with first cycle OFF). During any defrost phase the output **HEt** does not follow par. **dAF** and **Hon**, but keep on cycling.

11.11 END DEFROST BY TIME ALARM

This control is active if **dEt=Y** and **dFP**(or **dSP**)**≠nP**. If the defrost keeps on running for the **MdF** (or **MdS**) time without reaching the end temperature **dtE** (or **dtS**), the condition will be signaled as a warning alarm:

- The relative modbus status will be set
- Only if **dE3=Y**:
  - With a “dEt” label on the display
  - Switching on the alarm icon
  - Activating the alarm relay (if present and properly configurated)
  - Activating the buzzer (if present and properly configurated)

12. EVAPORATOR FAN

To enable the evaporator fan management it is required to set an evaporator probe (par. **FAP**). Here are the involved parameters:

- **FAP**: to select the control probe
- **FSt**: to select the deactivation setpoint
- **HYF**: differential
- **FnC**: to define the working mode:
  - **C-n:** in parallel with compressor output and stopped during any defrost. When compressor is OFF, they will start a duty-cycle mode (see **FoF**, **Fon**, **FF1** and **Fo1** parameters)
  - **O-n:** always on, stopped during any defrost
  - **C-Y:** in parallel with compressor output and always on during any defrost. When compressor is OFF, they will start a duty-cycle mode (see **FoF**, **Fon**, **FF1** and **Fo1** parameters)
  - **o-Y:** always on
- **Fnd:** activation delay after any defrost

12.1 EVAPORATOR FAN AND DIGITAL INPUT

When a digital input is configured as a door switch (**ixF=dor**) and this digital input is active, evaporator fan and compressor status will depend on par. **odC**:

- **odC=no**: normal regulation
- **odC=FAn**: evaporator fan OFF
- **odC=CPr**: compressor OFF
- **odC=F-C**: compressor and evaporator fan OFF

When **rrd=Y**, the regulation restarts after **d1d** or **d2d** time.

12.2 EVAPORATOR FAN CONTROL WITH ANALOGUE OUTPUT

The analogue output **xAo=FAn (x=1, 2)** can be controlled by the evaporator fan regulator. In this case the regulation is proportional within the regulation band, excluding the first **xAt (x=1, 2)** seconds where it is activated at the maximum value **xoH (x=1, 2)**.

- With **T > FSt**: analogue output is OFF (0%)
- With **FST-oFE < T <= FSt**:
  - During any activation (temperature is decreasing) the analogue output stays OFF (0%)
  - During any deactivation (temperature is increasing) the analogue output stays at **xoL**
- With **FSt-HYF-oFE < T <= FSt-oFE**:
  - During any activation (temperature is decreasing) the analogue output will change proportionally in the range [**xoL** to **xoH**] (excluding the first **xAt** sec where the fixed value **xoH** is used)
  - During any deactivation (temperature is increasing) the analogue output will change proportionally in the range [**xoL** to **xoH**]
- With **T <= FSt-HYF-oFE**: analogue output stays at **xoH**

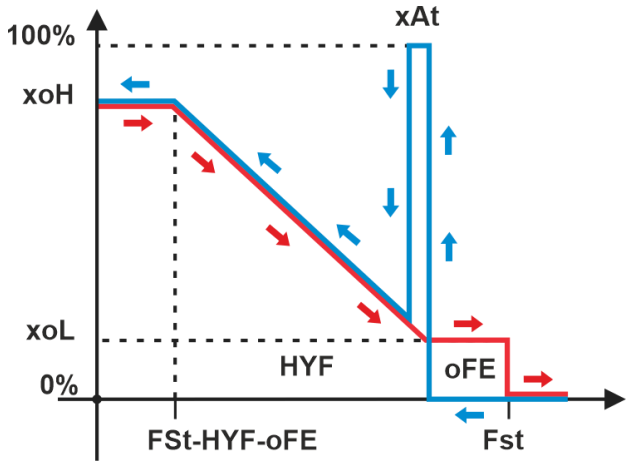

12.2.1 SPECIAL CONDITIONS

CONDITION	Output level
Output enabled and **FAP=nu**	**1oH or 2oH**
Output not enabled and **FAP=nu**	0%
Stand-by	0%
Error probe	**1oH or 2oH**
Output disabled through door open (**ixF=dor, odC=FAn or F-C**)	0%
Restart after door open alarm disabled (**ixF=dor, odC=FAn or F-C, rrd=n**)	0%
Restart after door open alarm enabled (**ixF=dor, odC=FAn or F-C, rrd=Y**)	**1oH or 2oH**
FnC=C-n or **C-Y** and at least a compressor ON	Controlled by evaporator fan regulator
FnC=C-n or **C-Y** and no compressor ON	During **Fon:** Controlled by evaporator fan regulator. During **FoF:** 0%
FnC=O-n or **O-Y**	Controlled by evaporator fan regulator
Defrost	**FnC=C-n**: 0% **FnC=O-n**: 0% **FnC=C-Y**: • **Ft=Y**: Controlled by evaporator fan regulator. • **Ft=n: 1oH or 2oH** **FnC=O-Y**: • **Ft=Y**: Controlled by evaporator fan regulator. • **Ft=n**: **1oH or 2oH**
Draining	Controlled by evaporator fan regulator
Lockout alarm	0%
Motion detection	After motion detection: output at **FMr** for **Fti.** Without motion detection: controlled by evaporator fan regulator
Anti short cycle (par. **FCt**)	Evaporator fan control disabled.

12.3 EVAPORATOR FAN MAINTENANCE FUNCTION

Par. **LA1** enables a threshold with the meaning of (tens of) hours of operation before maintenance. The counter will be increased when any evaporator fan output is ON.

If **LA1 = 0** the maintenance function is disabled (for all types of evaporator fans).
After reaching the value indicated in par. **LA1**:

- The label relating to the maintenance alarm will appear on the display (**"FSr"**: condenser fan service).
- The buzzer, if present, will not be activated.
- The alarm relay, if present, will not be activated.
- The modbus alarm status will be set.

To reset this maintenance alarm:
- Enter programming mode, access par. **rS1** and set it to **"Y"** and confirm with the SET button.
- Send the reset command via Modbus.

After the counter reset:
- The maintenance alarm will be deactivated (label and modbus status reset).
- The counter relating to the maintenance alarm will be reloaded.

13. CONDENSER FAN

To enable the condenser fan management it is required to set a condenser probe (par. **FAC**). Here are the involved parameters:
- **FAC**: to select the control probe
- **St2**: to select the deactivation setpoint
- **HY2**: differential
- **FCC**: to define the working mode:
  - **C-n:** in parallel with compressor output and stopped during any defrost. When compressor is OFF, they will start a duty-cycle mode (see **FoF**, **Fon**, **FF1** and **Fo1** parameters)
  - **o-n:** always on, stopped during any defrost
  - **C-Y:** in parallel with compressor output and always on during any defrost. When compressor is OFF, they will start a duty-cycle mode (see **FoF**, **Fon**, **FF1** and **Fo1** parameters)
  - **o-Y:** always on

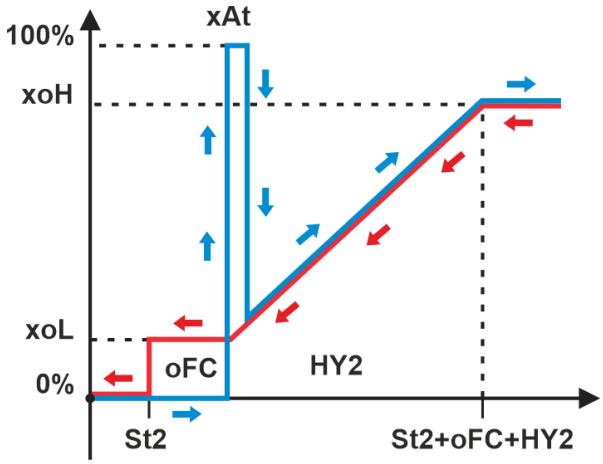

13.1 CONDENSER FAN CONTROL THROUGH AN ANALOGUE OUTPUT

The analogue output **xAo=Cnd (x=1, 2)** can be controlled by the condenser fan regulator. In this case the regulation is proportional within the regulation band, excluding the first **xAt (x=1,2)** seconds where it is activated at the maximum value (**100%**).

- With **T < St2**: analogue output is OFF (0%)
- With **St2 <= T < St2+oFC**:
  - During any activation (temperature is increasing) the analogue output stays OFF (0%)
  - During any deactivation (temperature is decreasing) the analogue output stays at **xoL (x=1, 2)**
- With **St2+oFC <= T < St2+oFC+HY2**:
  - During any activation (temperature is increasing) the analogue output will change proportionally in the range [**xoL** to **xoH**] (excluding the first **xAt** sec where the fixed value **xoH** is used) **(x=1,2)**
  - During any deactivation (temperature is decreasing) the analogue output will change proportionally in the range [**xoL** to **xoH**] **(x=1,2)**
- With **T > St2+HYF+oFE**: analogue output stays at **xoH (x=1,2)**

13.2 CONDENSER FAN MAINTENANCE FUNCTION

Par. **LA2** enables a threshold with the meaning of (tens of) hours of operation before maintenance. The counter will be increased when any evaporator fan output is ON.

If **LA2 = 0** the maintenance function is disabled (for all types of evaporator fans).
After reaching the value indicated in par. **LA2**:

- The label relating to the maintenance alarm will appear on the display (**"CSr"**: condenser fan service).
- The buzzer, if present, will not be activated.
- The alarm relay, if present, will not be activated.
- The modbus alarm status will be set.

To reset this maintenance alarm:
- Enter programming mode, access par. **rS2** and set it to **"Y"** and confirm with the SET button.
- Send the reset command via Modbus.

After the counter reset:
- The maintenance alarm will be deactivated (label and modbus status reset).
- The counter relating to the maintenance alarm will be reloaded.

13.3 DYNAMIC SETPOINT FOR CONDENSER FAN

This function modifies the setpoint value of the condenser fan regulator (par. **St2**) adding a proportional term which is calculated according to the temperature measured by the **dSi** probe (with **dSi=nP** the dynamic setpoint function is disabled). Here follows the parameters involved:

- **dSi:** temperature probe for proportional term calculation
- **dSS:** start of scale for proportional term calculation
- **dSb:** proportional band
- **dSH:** differential for proportional term calculation

The dynamic set function is here described with both par. **dSb** and par. **dSH** positive. When the temperature measured by probe **dSi** exceeds the **dSS** value, the dynamic set adjustment function is activated. The dynamic setpoint value increases proportionally with the temperature measured by the probe **dSi**. If the temperature measured by the probe **dSi** probe exceeds the value **dSS+dSb**, then the dynamic setpoint value will remain fixed at the **dSH** value. The dynamic setpoint value is always added to the setpoint value 2 (par. **St2**).

14. AUXILIARY REGULATOR

The auxiliary output can be managed by digital inputs (**oAx=AUS**, **ixF=AUS**): the output is switched on and off following the relative digital input status.

14.1 AUXILIARY REGULATOR

The auxiliary regulator can be used to manage the auxiliary output. Here are the involved parameters:
- **ACH:** type of regulation for the auxiliary output: **Ht**=inversely proportional (heating); **CL**=directly proportional (cooling).
- **SAA:** set point for regulation band.
- **SHY:** differential for regulation band.
- **ArP:** probe for auxiliary regulator.
- **Sdd:** auxiliary output OFF during any defrost.
- **2At:** start-up interval at max.

14.2 ONOFF REGULATION WITH DIGITAL OUTPUT

Heating action:
- Output activation when **T<SAA-SHY**
- Output deactivation when **T>SAA**

Cooling action:
- Output activation when **T>SAA+SHY**
- Output deactivation when **T<SAA**

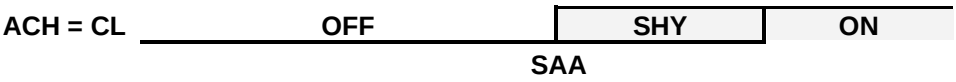

14.3 PROPORTIONAL REGULATION WITH ANALOGUE OUTPUT

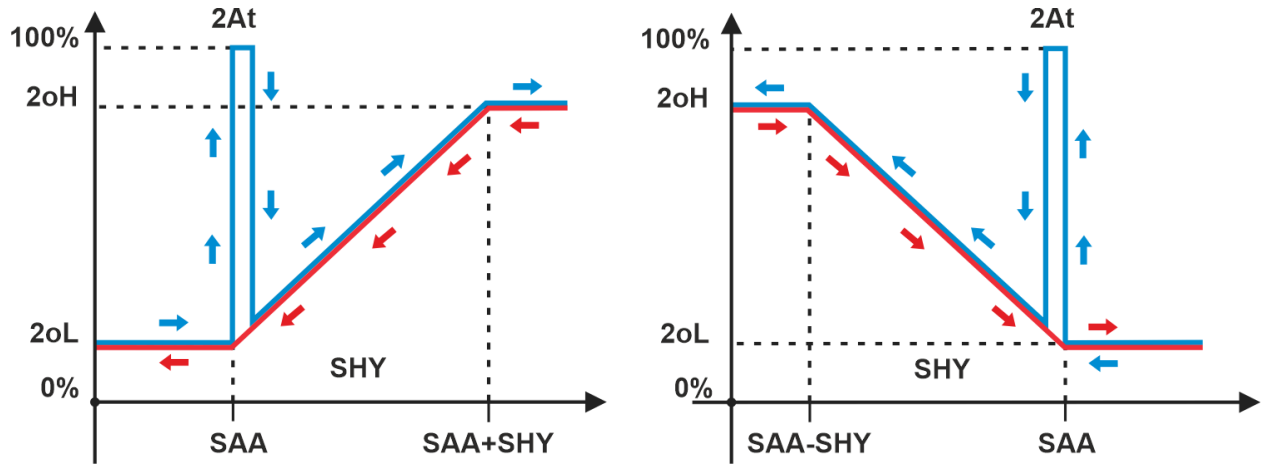

14.4 TIMED ACTIVATION

The following parameters can be used to define fixed activation and deactivation intervals.

- **btA:** base time for auxiliary output activation and deactivation intervals.
- **Ato:** auxiliary activation interval.
- **AtF:** auxiliary deactivation interval.

14.5 GENERAL NOTES

if **oAx=AUS** and **ArP=nP** (no probe for auxiliary digital output) the auxiliary output can be managed by:

- Digital input if **ixF=AUS.**
- Auxiliary button (if set as **AUS**).
- Serial command (Modbus protocol).
- Fixed interval of time if **Ato>0** and **AtF>0**
    - if **Ato=0** and **AtF>=0** the auxiliary output is disabled.
    - if **Ato>=0** and **AtF=0** the auxiliary output is enabled.

14.5.1 SPECIAL CONDITIONS

Device status	Probe condition	Command type	Relay output	Analogue output
ON	Available	Button Digital input Modbus command	Activation: output forced ON Deactivation: output forced OFF, after that the auxiliary regulator regains control.	Activation: output forced ON Deactivation: output forced OFF, after that the auxiliary regulator regains control.
ON	Error	Button Digital input Modbus command	Cyclic activation following par. **Ato** and **AtF.** Activation or deactivation by button, digital input oe Modbus command will force the output ON or OFF.	Cyclic activation following par. **Ato** and **AtF.** Activation or deactivation by button, digital input or Modbus command will force the output at **xoH** or **xoL (x=1,2)**.
ON	Not available, **ArP=nu**	Button Digital input Modbus command	Cyclic activation following par. **Ato** and **AtF.** Activation or deactivation by button, digital input oe Modbus command will force the output ON or OFF.	Cyclic activation following par. **Ato** and **AtF.** Activation or deactivation by button, digital input oe Modbus command will force the output at **xoH** or **xoL (x=1,2)**.
OFF	Available	Button Digital input Modbus command	Activation: output forced ON Deactivation: output forced OFF	Activation: output forced at **xoH (x=1,2)** Deactivation: output forced at 0%

OFF	Error	Button Digital input Modbus command	Activation: output forced ON Deactivation: output forced OFF	Activation: output forced at **xoH (x=1,2)** Deactivation: output forced at 0%
OFF	Not available, **ArP=nu**	Button Digital input Modbus command	Activation: output forced ON Deactivation: output forced OFF	Activation: output forced at **xoH (x=1,2)** Deactivation: output forced at 0%

15. LIGHT OUTPUTS

The light output can be managed by:
- Device ON, if **LAU=Y**
- Door input, if **ixF=dor** and **CLi=Y**
- Button, if set as **bxC=LiG**
- Digital inputs, if set as **ixF=LiG**
- Energy saving, if **LdE=Y**
- Motion sensor, if **ixF=EMt**
- Modbus command

15.1 ACTIVATION WHEN DEVICE GOES ON

If par. **LAU=Y**, every power on will activate the light output.
If par. **LoF=Y**, light output will be switched off after power off or in stand-by.

15.2 ACTIVATION BY DOOR INPUT

If par. **ixF=dor (x=1,2)** and **CLi=Y**, the light output:
- Will be activated after door opening event
- Will be deactivated after door closing event

15.3 ACTIVATION BY DIGITAL INPUT

When par. **ixF=LiG (x=1,2),** the light output:
- Stays ON until receiving next OFF command if par. **LCi=0**.
- Stays ON until timer **LCi** expire if par. **LCi>0**.

NOTE: if another available digital input is set as **ixF=dor**, this function is automatically disabled.

15.4 ACTIVATION BY ENERGY SAVING

The energy saving mode can modify the light output status as follow:
- **LdE=Y**: light output OFF when energy saving ON and light output ON when energy saving OFF.
- **LdE=n**: light output not affected by energy saving status.

15.5 ACTIVATION BY MOTION SENSOR

When par. **ixF=EMt** the light output status will be modified by external motion sensor (model X-MOD). The logic follows.
- The light output will be activated after detecting **n01** motion events.
- The light output will stay ON for **t01** min.

15.6 ACTIVATION BY MODBUS COMMAND

The light outputs can be activated or deactivated by modbus command.

15.7 ACTIVATION BY ANALOGUE OUTPUT (2Ao=LiG)

The analogue output can be used to vary the level of light intensity. The operation mode is defined by the following parameters:
- **MA2** = standard mode (**Std**), variation with predefined levels (**StP**)
    - If **MA2=Std**: analogue output 2 is activated (forced to value **2oH**) and deactivated (forced to value **2oL**) by using the **LiG** button.
    - If **MA2=StP**: analogue output 2 will assume one of the values par. **LL1...LL4**. Every pressure on the **LiG** button will change the value from **LLx** (current one) to **LLy** (next one). A sound will inform the user about the selected level (1 bip for **LL1**, 2 bips for **LL2** and so on).

- **LLy (y=1 to 4)** = these parameters are used to define 4 fixed values for the analogue output 2. Any pressure of the **LiG** button will change the value of the analogue output, selecting the next available level in a cyclic manner (**LL1**, **LL2**, **LL3**, **LL4**, **LL1**, …).

NOTES:
- The current level **LLy** is saved into memory in case of power off or stand-by. At start-up the saved value will be used to set the light output level.
- If **MA2=StP**, the **2oL** and **2oH** values and the interval **2At** will not considered.
- If **MA2=Std**, the light OFF status set the analogue output value to **0%**.
- If **MA2=Std**, the light ON status set the analogue output value to **2oH**.

15.7.1 SPECIAL CONDITIONS

Condition	Output level
Stand-by with par. **MA2=Std**	If **LoF=Y**: 0% If **LoF=n**: previous value.
Stand-by with par. **MA2=StP**	If **LoF=Y**: 0% If **LoF=n**: previous level **LLy (y=1 to 4)**
Power-on or exit from stand-by, par. **MA2=Std**	If **LAU=Y**: **2oH** If **LAU=n**: 0%
Power-on or exit from stand-by, par. **MA2=StP**	If **LAU=Y**: previous saved level **LLy (y=1 to 4)**. If **LAU=n**: 0%
Output toggle by button, with device ON and par. **MA2=Std**	ON = **2oH** OFF = 0%
Output toggle by modbus command, with device ON and par. **MA2=Std**	ON = **2oH** OFF = 0%
Output toggle by digital input, with device ON and par. **MA2=Std**	ON = **2oH** OFF = 0%
Output toggle by button, with device ON and par. **MA2=StP**	Move through levels**: LL1→LL2→LL3→LL4→LL1→**…
Output toggle by modbus command, with device ON and par. **MA2=StP**	Set level **LLy (y=1 to 4)**
Output toggle by digital input, with device ON and par. **MA2=StP**	Output unchanged, digital input disabled.
Output toggle by button, with device OFF and par. **MA2=Std**	ON = **2oH** OFF = 0%
Output toggle by modbus command, with device OFF and par. **MA2=Std**	ON = **2oH** OFF = 0%
Output toggle by digital input, with device OFF and par. **MA2=Std**	ON = **2oH** OFF = 0%
Output toggle by button, with device OFF and par. **MA2=StP**	**LL1→LL2→LL3→LL4→LL1→**… If output value=0% after going in stand-by, first button press will set level **LL1**.
Output toggle by modbus command, with device OFF and par. **MA2=StP**	Set level **LLy (y=1 to 4)**
Output toggle by digital input, with device OFF and par. **MA2=StP**	Output unchanged, digital input disabled.
Lockout alarm	Output unchanged.

16. SANITIZATION

The sanitization output is controlled by:
- Button, if set as **bxt=SAn**
- Digital inputs, if set as **ixF=SAn**
- Modbus command
- “Function” menu
- Fixed intervals, par. **iSn** and **tSn** (set **iSn>>tSn** for optimal operation)
- Pre-programmed intervals (only with real time clock), par. **tSA**, **dSA**, **tSH** and **dSH**.

NOTES:
- After power-off, stand-by or in case of any blackout the running sanitization task is stopped and reset. Sanitization status is never saved in memory.
- Pre-programmed activations (RTC enabled) inhibit fixed intervals.
- Manual activations (by button, digital inputs, modbus commands or “Function” menu):
    - Have no priority. Every command changes the current sanitization status.
    - Can work also in stand-by mode.
    - Can work with fixed or pre-programmed intervals.
    - Activation time defined by par. **tSn**
- Sanitization is totally independent from other regulations.

16.1 SAFETIES

The sanitization is:
- Disabled in case of door open event and if par. **ixF=dor**
- Disabled in case of any trapped alarm man
- Enabled and disabled by button, if par. **bxt=SAn**
- Enabled and disabled by modbus command

NOTES:
- Any sanitization activation received during a door open condition will be postponed after the next door closed event.
- Any lockout alarm immediately stops the sanitization.

16.2 ACTIVATION THROUGH DIGITAL OUTPUT (oAx=SAn)

This needs a digital output set as snitization: **oAx=SAn**.

16.3 ACTIVATION THROUGH ANALOGUE OUTPUT (1Ao, 2Ao=SAn)

This needs an analogue output set as snitization: **1Ao**, **2Ao=SAn**.

Condition	Output level
Sanitization enabled	**1oH, 2oH**
Sanitization disabled	0%
Stand-by	0%
Lockout alarm	0%

17. AIR EXTRACTION FAN

The air extraction fan output is controlled by:
- Button, if set as **bxt=EFn**
- Digital input, if set as **ixF=EFn (x=1,2)**
- Modbus command
- “Function” menu
- Fixed intervals, par. **iAE** and **tAE** (set **iAE>>tAE** for optimal operation)

17.1 ACTIVATION BY ANALOGUE OUTPUT (1Ao, 2Ao=EFn)

The analogue output can be used to change the ventilator speed. The operation mode is defined by the following parameters:
- If **MAx (x=1, 2)=Std**: analogue output **x** is activated (forced to value **xoH**) and deactivated (forced to value **0%**).
- If **MAx (x=1, 2)=StP**: analogue output 2 will assume one of the values par. **LL1...LL4**. Every pressure of the **bxC=EFn** button will change the value from **LLx** (current one) to **LLy** (next one). A sound will inform the user about the selected level (1 bip for **LL1**, 2 bips for **LL2** and so on).

NOTES:
- The current level **LLy (y=1 to 4)** is saved into memory in case of power off or stand-by. At start-up the saved value will be used to set the light output level.
- If **MAx (x=1, 2)=StP**, the **xoL** and **xoH** evalues and the interval **xAt** will not be considered.

17.1.1 SPECIAL CONDITIONS

Condition	Output level
Output enabled	**xoH (x=1, 2)**
Output disabled	0%
Stand-by	0%
Output toggle by button, with device ON and par. **MAx=Std**	ON = **xoH (x=1, 2)** OFF = 0%
Output toggle by modbus command, with device ON and par.**MAx=Std**	ON = **xoH (x=1, 2)** OFF = 0%
Output toggle by digital input, with device ON and par. **MAx=Std**	ON = **xoH (x=1, 2)** OFF = 0%
Output toggle by button, with device ON and par. **MAx=StP**	**LL1→LL2→LL3→LL4→LL1→**…
Output toggle by modbus command, with device ON and par.**MAx=StP**	Set level **LLy (y=1 to 4)**
Output toggle by digital input, with device ON and par. **MAx=StP**	Output unchanged, digital input disabled.
Output toggle by button, with device OFF and par. **MAx=Std**	ON = **xoH (x=1, 2)** OFF = 0%
Output toggle by modbus command, with device OFF and par.**MAx=Std**	ON = **xoH (x=1, 2)** OFF = 0%
Output toggle by digital input, with device OFF and par. **MAx=Std**	ON = **xoH (x=1, 2)** OFF = 0%
Output toggle by button, with device OFF and par. **MAx=StP**	**LL1→LL2→LL3→LL4→LL1→**… If output value=0% after going in stand-by, first button press will set level **LL1**.
Output toggle by modbus command, with device OFF and par. **MAx=StP**	Set level **LLy (y=1 to 4)**
Output toggle by button, with device OFF and par. **MAx=StP**	Output unchanged, digital input disabled.
Lockout alarm	Output unchanged.

18. DIGITAL OUTPUTS

Depending on the model, one or more digital outputs (relays) can be configurated with one of the following functionalities.

18.1 COMPRESSOR OUTPUT (oAx = CP1)

With **oAx=CP1** the relay operates as the main regulation output.

18.2 DEFROST OUTPUT (oAx = dEF)

With **oAx=dEF** the relay operates as a defrost output.

18.3 EVAPORATOR FAN OUTPUT (oAx = FAn)

With **oAx=FAn** the relay operates as an evaporator fan output.

18.4 ALARM OUTPUT (oAx = ALr)

With **oAx=ALr** the output operates as an alarm output. It is activated every time an alarm happens. Its status depends on the **tbA** parameter: if **tbA=Y**, the output is deactivated by pressing any key.
If **tbA=n**, the alarm output stays on until the alarm condition recovers.

18.5 TRAPPED ALARM OUTPUT (oAx = ALM)

With **oAx=ALM** the relay operates as a trapped alarm output. It is used to activate an external horn.

18.6 LIGHT OUTPUT (oAx = LiG)

With **oAx=LiG** the relay operates as a light output.

18.7 AUXILIARY OUTPUT (oAx = AUS)

See the AUXILIARY REGULATOR paragraph for furter information.

18.8 DEAD BAND REGULATION (oAx = db)

With **oAx=db** the output can be used to control, for example, a heater element. It is used to implement a dead band regulation. If so:

- **oAx=db** cut in is **SET-HYd**
- **oAx=db** cut out is **SET**

18.9 ON/OFF OUTPUT (oAx = onF)

When **oAx=onF**, the output is activated when the controller is switched on and deactivated when the controller is switched off.

18.10 ENERGY SAVING OUTPUT (oAx = HES)

When **oAx=HES**, the output is activated when the energy saving mode is active and vice-versa.

18.11 CONDENSER FAN OUTPUT (oAx = Cnd)

With **oAx=Cnd** the relay operates as a condenser fan output.

18.12 SECOND COMPRESSOR OUTPUT (oAx = CP2)

With **oAx=CP2** the relay operates as a second regulation output. This function is available only for special models and normally must be not selected.

18.13 SECOND DEFROST OUTPUT (oAx = dF2)

With **oAx=dF2** the relay operates as second defrost output. This function is available only for special models and normally must be not selected.

18.14 HEATER OUTPUT (oAx = HEt)

With **oAx=HEt** the relay operates as a heater output. In this case, it will be used during and after any defrost cycle. The par. **Hon** defines the time the relative output will stay active after the end of a defrost operation.

18.15 INVERTER OUTPUT (oAx = inV)

The output is enabled when the inverter (variable speed compressor) is ON.

18.16 SOLENOID VALVE (oAx=So1)

With **oAx=So1** the relay operates as a solenoid valve output and used with PUMP DOWN function.

18.17 AIR EXTRACTION FAN

With **oAx=EFn** the relay operates as an air extraction fan output. See the relative paragraph for more information.

18.18 SANITIZATION (oAx=SAn)

With **oAx=SAn** the relay operates as a sanitization output. See the relative paragraph for more information.

19. DIGITAL INPUTS

The digital inputs are programmable by using par. **i1F** and **i2F**. Both inputs are free of voltage type.

19.1 DOOR SWITCH (ixF=dor)

It signals the door status. Some relay outputs can be toggled depending on the **odC** parameter:

- **odC = no** no change
- **odC = FAn** evaporator fan will be switched off
- **odC = CPr** compressor will be switched off
- **odC = F-C** both compressor and evaporator fan will be switched off

Since the door is opened:

- the door alarm is enabled
- the display shows the message “dA”
- the regulation restarts only if **rrd = Y**.

The alarm stops as soon as the external digital input is disabled again. During door open conditions, the high and low temperature alarms are disabled.

19.2 START DEFROST (ixF=dEF)

It starts a defrost if all conditions are fulfilled (temperature, delays, etc.). After finishing a defrost, the normal regulation will restart only if the digital input is disabled, otherwise the instrument will wait until the **MdF** safety time is expired.

19.3 AUXILIARY OUTPUT (ixF=AUS)

The AUX output (if present and configured) will be enabled / disabled following the status of the relative digital input.

19.4 ENERGY SAVING (ixF=ES)

The energy saving mode will be enabled / disabled following the status of the relative digital input.

19.5 EXTERNAL WARNING ALARM (ixF=EAL)

It is used to detect an external alarm. It does not lock the regulation.

19.6 EXTERNAL LOCK ALARM (ixF=bAL)

It is used to detect any critical external alarm. It locks immediately the regulation.

19.7 EXTERNAL PRESSURE ALARM (ixF=PAL)

It is used to detect any pressure external alarm. This signal locks the regulation after detecting **nPS** events in the interval **dxd**.

19.8 EVAPORATOR FAN MODE (ixF=FAn)

It is used to activate the “humidity control through the evaporator fan” function. If evaporator fan are controlled through an analogue output, the control signal will be set to **2oL** when the digital input is activated.

19.9 REMOTE HOLIDAY MODE (ixF=HdF)

It is used to force the holiday mode.

19.10 REMOTE ONOFF (ixF=onF)

It is used to switch ON and OFF the device remotely.

19.11 LIGHT OUTPUT (ixF=LiG)

It is used to control the light output. Light activation through digital input will temporary overwrite the par. **LCi**:

- **LCi=0**: light status (ON or OFF) depends on digital input status (ON or OFF)
- **LCi>0**: light output stays ON after digital input activation (ON) for **LCi**. A deactivation command (digital input goes OFF) will change the light output immediately OFF.

19.12 PARAMETER MAP CHANGE (ixF=MAP)

It is used to change the parameter map (switch between 2 available parameter maps).

19.13 MOTION SENSOR DETECTOR (ixF=EMt)

It is used to connect an X-MOD motion sensor. Use only a compatible X-MOD 5Vdc model. The following features can be activated through the external motion sensor:

- Evaporator speed reduction: if **Fti>0**, after detecting **Fnu** motion events the evaporator fan speed will be fixed to **FMS** for time **Fti**.
- Light timed activation: after detecting **n01** motion events, the light outputs will be activated for time **t01**.

19.14 LOW PRESSURE INPUT FOR PUMP DOWN (ixF=LPS)

Connect the low pressure input to control the PUMP DOWN function.

19.15 CLEANING (ixF=CLn)

This function forces the device in stand-by and with the following status:

- All icon switched OFF
- Label “CLn” on display

Using par. **ECL** it is possible to control the air extraction fan output.

The only managed alarm is the trapped man one through digital input (for example using the second available digital input).

The deactivation of the cleaning function (digital input OFF) will force the device to exit from stand-by, reactivation the regulation and resetting all timers.

Cleaning function can be activated by:
- Button (**bxt=CLn**)
- Digital input
- Modbus command
- “Function” menù

19.16 GAS LEAKAGE ALARM (ixF=GAS)

This is a special function used to connect an external leakage gas sensor. The digital input activation will:
- Enable the gas leakage alarm con label “GAS” blinking on the display
- Activate the buzzer (if properly configured)
- Activate the alarm output (if properly configured)

19.17 STOP COOLING FUNCTION (ixF=StC)

A digital input set as **ixF=StC** is used to enable regulation. The deactivation of the digital input causes an immediate regulation stop (with all relative outputs disabled). Alarms are not modified from stop cooling.

Conditions before stop cooling	Conditions after stop cooling
Regulation ON	Regulation OFF
Regulation OFF	Regulation OFF
Defrost ON	Not modified. Defrost phase will end and, after that, the device will stay in dripping phase.
Dripping ON	Dripping ON
Stand-by	Stand-by

19.18 SANITIZATION (ixF=SAn)

It is used to activate the sanitization function. Outputs will be activated:
- Following **tSn** timer, when **tSn>0**

19.19 TRAPPED MAN ALARM (ixF=tPA)

It is used to activate the the trapped man alarm function. See relative “tPA” alarm description.

20. ANALOGUE OUTPUTS

The controller is equipped with a couple of analogue outputs with the following features:
- **1An=PUL:** a PWM configurable analogue output.
- **1An=FrE:** internal usage only. Do not select this option.
- **2An=010:** a 0-10Vdc configurable analogue output
- **2An=420:** a 4-20mA configurable analogue output

20.1 ANALOGUE OUTPUTS CONFIGURATION

The following parameters are used to set up the analogue outputs:
- **1oL, 2oL** = minimum value
- **1oH, 2oH** = maximum value
- **1At, 2At** = interval with analogue output at maximum value after activation

The following functions can be used with the analogue outputs 1 and 2 and through par. **1Ao** and **2Ao**:
- **nu** = output disabled.
- **tiM** = timed activation.
- **FAn** = the evaporator fan regulator defines the output value.
- **Cnd** = the condenser fan regulator defines the output value.
- **AUS** = the auxiliary regulator defines the output value.
- **ALr** = output at maximum value in case of any alarm condition. Output at minimum value in all other cases.
- **inv** = inverter compressor

- **vAL** = fixed value through par. **1AS** and **2AS**
- **HEt** = heating elements
- **EFn** = air extraction fan
- **SAn** = sanitization
- **LiG** = the output value will change accordingly to par. **MA2** and **LLy (y= 1 to 4)**. Valid for analogue output 2 only.

20.2 WORKING MODE

Par. **MA1, MA2** selects the type of analogue output 1 or 2 working mode:
- **Std** = standard, the analogue output 1 or 2 follows the relative regulator or function as set by par. **1Ao**, **2Ao**.
- **StP** = step, the analogue output 1 or 2 value follows par. **LLx** (x=1,2,3,4). This logic can be used only when **1Ao=EFn** or **vAL** or when **2Ao=LiG**, **EFn** or **vAL**.

20.3 TIMED ACTIVATION (1Ao, 2Ao=tiM)

In this case the analogue output will stay at **1oL**, **2oL** during **AtF** time and at **1oH**, **2oH** during **Ato** time.
NOTE: in stand-by the analogue output stays at 0%.

20.4 ALARM OUTPUT (1Ao, 2Ao=ALr)

In this case the analogue output will stay at **1oH**, **2oH** in case of any active alarm.
When in stand-by, the analogue output stays at:
- No active alarms: 0%.
- At least an alarm is active: **1oH**, **2oH**

20.5 FIXED VALUE (1Ao, 2Ao=vAL)

In this case the analogue output will stay at value **1AS**, **2AS**.
NOTES:
- Values **1oL**, **2oL** and **1oH**, **2oH** are not considered.
- In stand-by the analogue output stays at 0%.

20.6 SANITIZATION (1Ao, 2Ao=SAn)

See the sanitization paragraph for furter information.

20.7 AIR EXTRACTION FAN (1Ao, 2Ao=EFn)

See the air extraction fan paragraph for furter information.

21. ALARM SIGNALLING

Label	Cause	Description
P1	P1 probe failure	See par. 21.1
P2	P2 probe failure	See par. 21.1
P3	P3 probe failure	See par. 21.1
P4	P4 probe failure	See par. 21.1
HA	High temperature alarm	See par. 21.2
LA	Low temperature alarm	See par. 21.2
HP2	High temperature pre-alarm	See par. 21.3
HA2	Second high temperature alarm	See par. 21.4
LA2	Second low temperature alarm	See par. 21.4
dA	Door open alarm	See par. 21.5
EA	Warning external alarm	See par. 21.6
CA	Lock external alarm	See par. 21.7
PA	Pressure switch alarm	See par. 21.8
EE	Internal memory alarm	See par. 21.9
rtC	Real time clock not properly set	See par. 21.10
rtF	Real time clock failure (HW problem)	See par. 21.10
bAt	Low battery level	See par. 21.10
SAF	Anti freezing alarm	See par. 21.11
tPA	Trapped man alarm	See par. 21.12
Pdt	Pump down	See par. 21.13

PdA	Low pressure switch failure	See par. 21.13
CLt	Cleaning function is running	See par. 21.14
GAS	Gas leakage alarm	See par. 21.15
FSr	Evaporator fan maintenance	See par. 21.16
CSr	Condenser fan maintenance	See par. 21.17
dEt	Latest defrost ends by time	See par. 21.18
SAn	Sanification output active	See par. 21.19

The buzzer can be muted by pressing any button and only if parameter **tbA=Y**.

21.1 PROBE FAILURE – Px

This event activates the following conditions:
- Alarm frame OFF
- Alarm icon ON
- Buzzer ON (if properly configured)
- Alarm output ON (if properly configured)
- Alarm label “Px” visible when in HOME screen and alternatively with temperature value
- Regulation keeps on running.
- When regulation probe failure:
    - Compressor output (**oAx=CP1**) follows safety intervals **Con** and **CoF**.
- Alarm recovery is automatic as soon as the failure condition is solved.

21.2 TEMPERATURE ALARM – HA, LA

Depends on the following parameters:
- **ALP**: temperature probe used as reference
- **ALL**: lower threshold
- **ALU**: upper threshold
- **dAo**: delay after power-on
- **ALd**: alarm visualization delay
- **EdA**: delay after any defrost
- **ESA**: delay after exiting any energy saving mode
- **dot**: delay after door opening event
- **AFH**: differential for alarm deactivation
- **ALC**: type of alarm
    - **rE**: relative to the setpoint. “HA” when **T>SET+ALU**, “LA” when **T<SET-ALL**
    - **Ab**: absolute. “HA” when **T>ALU**, “LA” when **T<ALL**

This event activates the following conditions:
- Alarm frame OFF
- Alarm icon ON (blinking@1Hz)
- Buzzer ON (if properly configured)
- Alarm output ON (if properly configured)
- Alarm label “HA” (high temperature) or “LA” (low temperature) visible when in HOME screen and alternatively with temperature value. An additional visualization delay can be set through par. **ALd**.
- Regulation keeps on running.
- Possible delay for alarm management:
    - Power on delay, par. **dAo**
    - A defrost is running
    - Alarm delay after any defrost, par. **EdA**
    - Alarm delay after any energy saving mode, par. **ESA**
    - Door open, par. **dot**
- Temperature alarms are not considered if any lockout alarm is active (PAL-pressure switch- or bAL-lockout-)
- Alarm recovery is automatic as soon as the failure condition is solved.

21.3 HIGH TEMPERATURE PRE ALARM – HP2

Depends on the following parameters:
- **AU1**: upper threshold
- **AH1**: differential for alarm deactivation
- **dAd**: delay after power-on
- **Ad1**: alarm visualization delay

This event activates the following conditions:

- Alarm frame OFF
- Alarm icon ON (blinking@1Hz)
- Buzzer ON (if properly configured)
- Alarm output ON (if properly configured)
- Alarm label “HA” (high temperature) or “LA” (low temperature) visible when in HOME screen and alternatively with temperature value. An additional visualization delay can be set through par. **ALd**.
- Regulation keeps on running.
- Possible delay for alarm management:
    - Power on delay, par. **dAd**
    - A defrost is running
    - Alarm delay after any defrost, par. EdA
    - Alarm delay after any energy saving mode, par. ESA
    - Door open, par. dot
- Temperature alarms are not considered if any lockout alarm is active (PAL-pressure switch- or bAL-lockout-)
- Alarm recovery is automatic as soon as the failure condition is solved.

21.4 SECOND TEMPERATURE ALARM – HA2, LA2

Depends on the following parameters:

- **AP2**: temperature probe used as reference
- **AL2**: lower threshold
- **AU2**: upper threshold
- **dA2**: delay after power-on
- **Ad2**: alarm visualization delay
- **AC2**: compressor stop due to low temperature alarm
- **bLL**: compressor stop due to high temperature alarm
- **dE2**: alarm management during any defrost
    - **dE2=nu**: alarm disabled during any defrost and draining phase
    - **dE2=dEF**: alarm enabled during any defrost and draining phase
    - **dE2=drA**: alarm enabled during any draining phase

This event activates the following conditions:

- Alarm frame OFF
- Alarm icon ON (blinking@1Hz)
- Buzzer ON (if properly configured)
- Alarm output ON (if properly configured)
- Alarm label “HA2” (high temperature) or “LA2” (low temperature) visible when in HOME screen and alternatively with temperature value. An additional visualization delay can be set through par. **Ad2**.
- Regulation depends on par. **bLL** and **AC2**.
- Possible delay for alarm management:
    - Power on delay, par. **dA2**

Alarm recovery depends on par. **AC2** and **bLL**:

- **AC2=n or Y:** automatic as soon as the failure condition is solved.
- **AC2=MAn:** manual through a power cycle or stand-by cycle.

21.5 DOOR OPEN ALARM – dA

Depends on the following parameters:

- **dxd (x=1,2)**: activation delay
- **odC**:
    - **no**: regulation not stopped
    - **FAn**: only evaporator fan outputs will be deactivated
    - **F-C**: both evaporator fan and compressor outputs will be deactivated
- **rrd**: regulation restart after door open event
- **ixF (X=1,2)=dor**

This event activates the following conditions:

- Alarm frame OFF
- Alarm icon ON (blinking@1Hz)

- Buzzer ON (if properly configured)
- Alarm output ON (if properly configured)
- Alarm label “dA” (door open alarm) visible when in HOME screen and alternatively with temperature value.
- Regulation depends on par. **rrd**.

Alarm recovery depends on par. **rrd**:
- **rrd=n:** automatic as soon as the alarm condition is solved (digital input deactivation).
- **rrd=Y:** after delay runs.

21.6 WARNING ALARM – EA

Depends on the following parameters:
- **dxd (x=1,2)**: activation delay
- **ixF (X=1,2)=EAL**

This event activates the following conditions:
- Alarm frame ON
- Alarm icon ON (blinking@1Hz)
- Buzzer ON (if properly configured)
- Alarm output ON (if properly configured)
- Alarm label “EA” (external alarm) visible when in HOME screen and alternatively with temperature value.
- Regulation never stopped.

Alarm recovery is automatic as soon as the alarm condition is solved (digital input deactivation).

21.7 LOCKOUT ALARM – CA

Depends on the following parameters:
- **dxd (x=1,2)**: activation delay
- **ixF (X=1,2)=bAL**

This event activates the following conditions:
- Alarm frame ON
- Alarm icon ON (blinking@1Hz)
- Buzzer ON (if properly configured)
- Alarm output ON (if properly configured)
- Alarm label “CA” (lockout alarm) visible when in HOME screen and alternatively with temperature value.
- Regulation stopped.

Alarm recovery is automatic as soon as the alarm condition is solved (digital input deactivation).

21.8 PRESSURE SWITCH ALARM – PA

Depends on the following parameters:
- **nPS**: number of alarm activation (during **dxd** interval) before stopping regulation
- **dxd (X=1,2)**: interval for pressure alarm monitoring
- **ixF (X=1,2)=PAL**

This event activates the following conditions:
- Alarm frame ON
- Alarm icon ON (blinking@1Hz)
- Buzzer ON (if properly configured)
- Alarm output ON (if properly configured)
- Alarm label “PA” (pressure lockout alarm) visible when in HOME screen and alternatively with temperature value.
- Regulation stopped.

Alarm recovery is:
- Automatic as soon as the alarm condition is solved (digital input deactivation) and if the number of alarm activations is less than **nPS** during interval **dxd**.
- Manual, through power cycling, if the number of alarm activations is larger than **nPS** during interval **dxd**.

21.9 INTERNAL MEMORY ALARM – EE

This event activates the following conditions:

- Alarm frame ON
- Alarm icon ON (blinking@1Hz)
- Buzzer ON (if properly configured)
- Alarm output ON (if properly configured)
- Alarm label “EE” (eeprom alarm) visible when in HOME screen and alternatively with temperature value.
- Regulation never stopped.

Alarm recovery is manual and through power cycling.

21.10 REAL TIME CLOCK ALARM – rtC, rtF, bAt

21.10.1 Type of managed alarms

Label	Meaning	How to solve
rtC	Real time clock to be adjusted	Enter programming mode and check all the “rtC” parameters.
rtF	Real time clock circuit failure	Device must be repaired from Dixell S.r.l. Please contact local reseller or Dixell Service for more information.
bAt	Battery level low	Replace battery (see next paragraph)

21.10.2 Real Time Clock Battery Replacement

	Operation
	1. Disconnect power supply and open the controller box
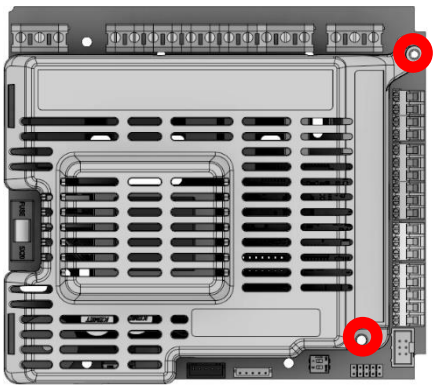	2. Remove the PCB protection cover (fixed with 2 screws)
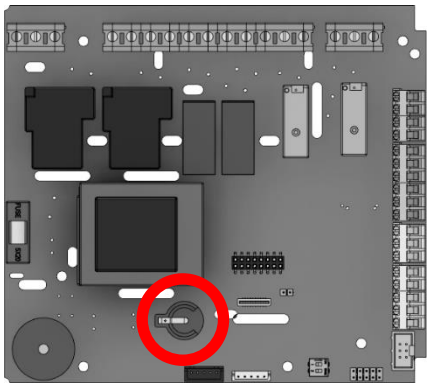	3. Replace the battery with a new one. Battery model to use is **BR1225/BN**

21.10.3 Alarm visualization mode

This event activates the following conditions:
- Alarm frame OFF
- Alarm icon ON (blinking@1Hz)
- Buzzer ON (if properly configured)
- Alarm output ON (if properly configured)
- Alarm label “rtC” (real time clock is not properly set) visible when in HOME screen and alternatively with temperature value.
- Alarm label “rtF” (real time clock circuit failure) visible when in HOME screen and alternatively with temperature value.
- Alarm label “bAt” (real time clock battery level is low) visible when in HOME screen and alternatively with temperature value.
- Regulation never stopped.

The recovery from RTC alarms is manual, as soon as the alarm or failure condition is solved.

21.11 ANTI FREEZING ALARM - SAF

This event activates the following conditions:
- Alarm frame OFF
- Alarm icon ON (blinking@1Hz)
- Buzzer OFF
- Alarm output ON (if properly configured)
- Alarm label “SAF” (safety anti freezing alarm) visible when in HOME screen and alternatively with temperature value.
- Regulation is stopped.

Alarm recovery is automatic as soon as temperature is T**>SET**.

21.12 TRAPPED MAN ALARM - tPA

Depends on the following parameters:
- **ixF (X=1,2)=tPA**

This event activates the following conditions:
- Alarm frame ON (blinking@1Hz)
- Alarm icon ON (blinking@1Hz)
- Buzzer ON (if properly configured)
- Alarm output ON (if properly configured, for example **oAx=ALr, ALM**)
- Alarm label “tPA” (safety anti freezing alarm) visible when in HOME screen and alternatively with temperature value.
- Regulation is stopped.
- Frame heater output (**oAx=HEt**) activated.

Alarm recovery is automatic as soon as the digital input (**ixF=tPA**) is deactivated.
It is never possible to put the controller in stand-by if this alarm is active.

21.13 PUMP DOWN ALARMS - Pdt, PdA

Depends on the following parameters:
- **ixF=LPS**
- **Pdt:** maximum time before stopping PUMP DOWN function

This event activates the following conditions:
- Alarm label “Pdt” (PUMP DOWN alarm) visible when in HOME screen and alternatively with temperature value.
- PUMP DOWN regulation is stopped (compressor outputs will be deactivated).

Depends on the following parameters:
- **PdA**: interval before activating low pressure switch failure

Alarm recovery is automatic as soon as the digital input (**ixF=LPS**) is deactivated.

This event activates the following conditions:

- Alarm frame ON (blinking@1Hz)
- Alarm icon ON (blinking@1Hz)
- Buzzer ON (if properly configured)
- Alarm output ON (if properly configured, for example **oAx=ALr, ALM**)
- Alarm label “PdA” (pressure switch failure) visible when in HOME screen and alternatively with temperature value.
- Regulation is not stopped.
- Frame heater output (**oAx=HEt**) activated.

Alarm recovery is manual through any button. Alarm output will be deactivated and buzzer muted, but the alarm label (PdA) will stay visible in HOME.

21.14 CLEANING FUNCTION - CLt

Depends on the following parameters:
- **ixF, bxC, bxt (x=1,2,…)=CLn**
- **CLt:** cleaning function duration

The cleaning function disable all alarms for interval **CLt**. Alarm frame ON (rotation right).

21.15 GAS LEAKAGE ALARM - GAS

Depends on the following parameters:
- **ixF (X=1,2)=GAS**
- **tPG:** interval before stopping regulation

This event activates the following conditions:
- Alarm frame ON (blinking@1Hz)
- Alarm icon ON (blinking@1Hz)
- Buzzer ON (if properly configured)
- Alarm output ON (if properly configured, for example **oAx=ALr, ALM**)
- Alarm label “GAS” (gas leakage alarm) visible when in HOME screen and alternatively with temperature value.
- Regulation is stopped.
- Frame heater output (**oAx=HEt**) activated.

Alarm recovery is automatic as soon as the digital input (**ixF=tPA**) is deactivated

21.16 EVAPORATOR FAN MAINTENANCE - FSR

Depends on the following parameters:
- **LA1**: maintenance interval
- **rS1:** reset maintenance

This event activates the following conditions:
- Alarm frame OFF
- Alarm icon OFF
- Buzzer OFF
- Alarm output OFF
- Alarm label “FSr” (evaporator fan maintenance alarm) visible when in HOME screen and alternatively with temperature value.
- Regulation is never stopped.

Alarm recovery is manual. Enter programming mode and set par. **rS1=YES** to reset maintenance alarm.

21.17 CONDENSER FAN MAINTENANCE - CSR

Depends on the following parameters:
- **LA2**: maintenance interval
- **rS2:** reset maintenance

This event activates the following conditions:
- Alarm frame OFF
- Alarm icon OFF
- Buzzer OFF

- Alarm output OFF
- Alarm label “CSr” (condenser fan maintenance alarm) visible when in HOME screen and alternatively with temperature value.
- Regulation is never stopped.

Alarm recovery is manual. Enter programming mode and set par. **rS2=YES** to reset maintenance alarm.

21.18 DEFROST ENDS BY TIME - dEt

Depends on the following parameters:
- **dEt:** to enable the defrost ends by time alarm
- **dE3:** enable alarm visualization

This event activates the following conditions when **dE3=YES**:
- Alarm frame OFF
- Alarm icon ON (blinking@1Hz)
- Buzzer ON (if properly configured)
- Alarm output ON (if properly configured, for example **oAx=ALr**)
- Alarm label “dEt” (defrost ends by time alarm) visible when in HOME screen and alternatively with temperature value.
- Regulation is never stopped.

Alarm recovery is manual. Enter programming mode and set par. **rS2=YES** to reset maintenance alarm.

21.19 SANITIZATION ALARM - SAn

This event activates the following conditions:
- Alarm frame OFF
- Alarm icon OFF
- Buzzer OFF
- Alarm output OFF
- Label “SAn” (sanitization) visible when in HOME screen and alternatively with temperature value.
- Regulations (cooling, heating, defrost) are never affected by the sanitization function.

22. SERIAL COMMUNICATION

The device supports different baudrates (par. **bAU**) and parity control (par. **PAr**). Please check the serial network to adapt them according to the other devices.

23. INSTALLATION AND MOUNTING

XER can be mounted on DIN rail or on a wall and fixed using up to 4 screws (type: D4.5mm x L55mm). The temperature range allowed for correct operation is 0 to 60°C. Avoid places subject to strong vibrations, corrosive gases, excessive dirt or humidity. The same recommendations apply to probes.

23.1 DIMENSIONS

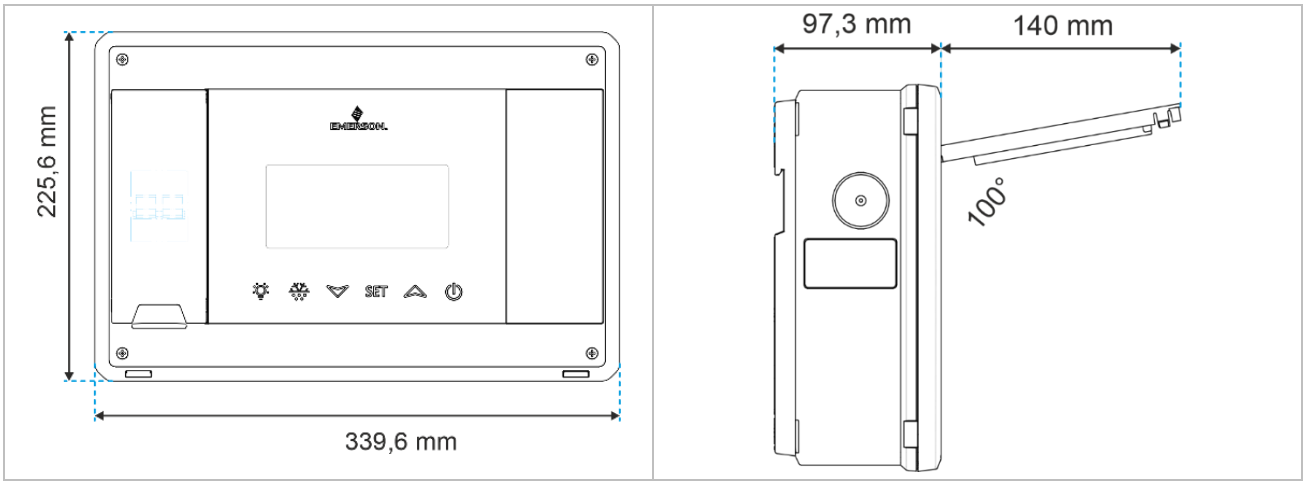

23.2 DIN RAIL MOUNT

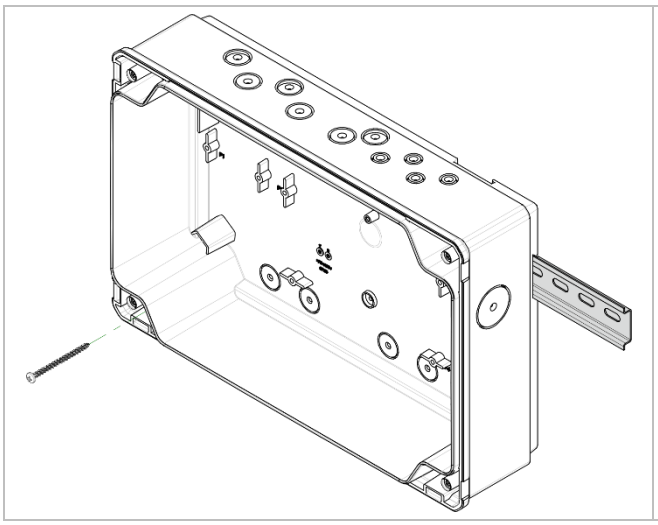

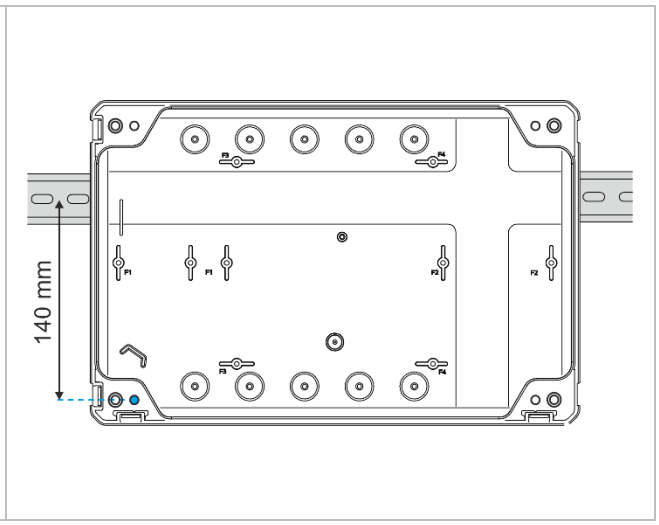

23.3 WALL MOUNT

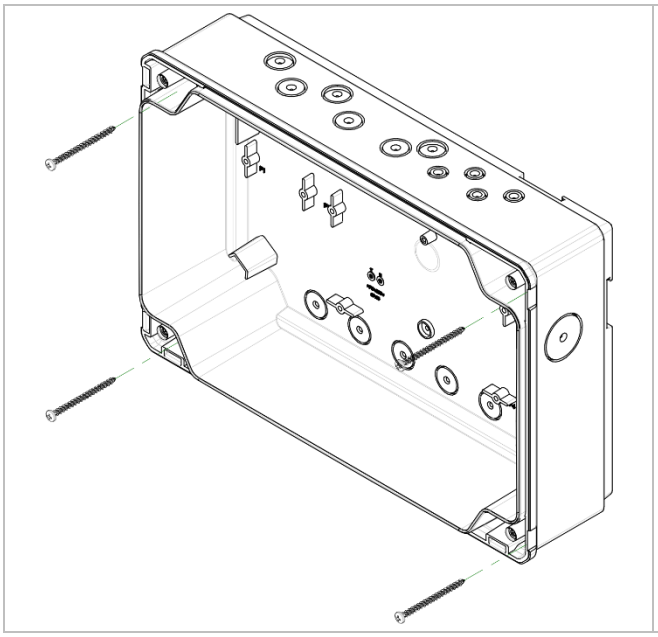

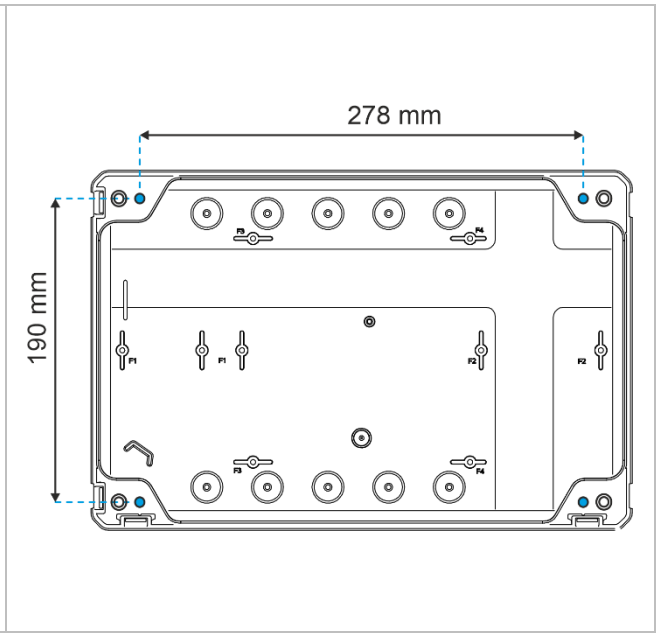

24. WIRING DIAGRAMS

XER1x0P: models without lateral door for electromechanical devices.
XER2xxP: models with lateral door for electromechanical devices. They can use Circuit Breaker or Residual Current Circuit Breaker with overcurrent protection.

	XER140P	XER160P	XER240P	XER260P
oA1	Yes	Yes	Yes	Yes
oA2	Yes	Yes	Yes	Yes
oA3	Yes	Yes	Yes	Yes
oA4	No	Yes	No	Yes
oA5	No	Yes	No	Yes
oA6	Yes	Yes	Yes	Yes
P1	Yes	Yes	Yes	Yes
P2	Yes	Yes	Yes	Yes

P3	No	Yes	No	Yes
P4	No	Yes	No	Yes
D.I.1	Yes	Yes	Yes	Yes
D.I.2	Yes	Yes	Yes	Yes
A.Out1	Optional	Optional	Optional	Optional
A.Out2	Optional	Optional	Optional	Optional
Circuit Breaker	No	No	No	No
Residual Current Circuit Breaker	No	No	No	No

	XER241P	**XER261P**	**XER242P**	**XER262P**
oA1	Yes	Yes	Yes	Yes
oA2	Yes	Yes	Yes	Yes
oA3	Yes	Yes	Yes	Yes
oA4	No	Yes	No	Yes
oA5	No	Yes	No	Yes
oA6	Yes	Yes	Yes	Yes
P1	Yes	Yes	Yes	Yes
P2	Yes	Yes	Yes	Yes
P3	No	Yes	No	Yes
P4	No	Yes	No	Yes
D.I.1	Yes	Yes	Yes	Yes
D.I.2	Yes	Yes	Yes	Yes
A.Out1	Optional	Optional	Optional	Optional
A.Out2	Optional	Optional	Optional	Optional
Circuit Breaker	Yes	Yes	No	No
Residual Current Circuit Breaker	No	No	Yes	Yes

24.1 LEGENDA

Label	Description
oAx (x=1…6)	Digital outputs (relays)
D.I.x (x=1, 2)	Digital Inputs
Px (x=1…4)	Probe inputs
A.Outx (x=1, 2)	Analogue Outputs

24.2 XER160P OR XER260P

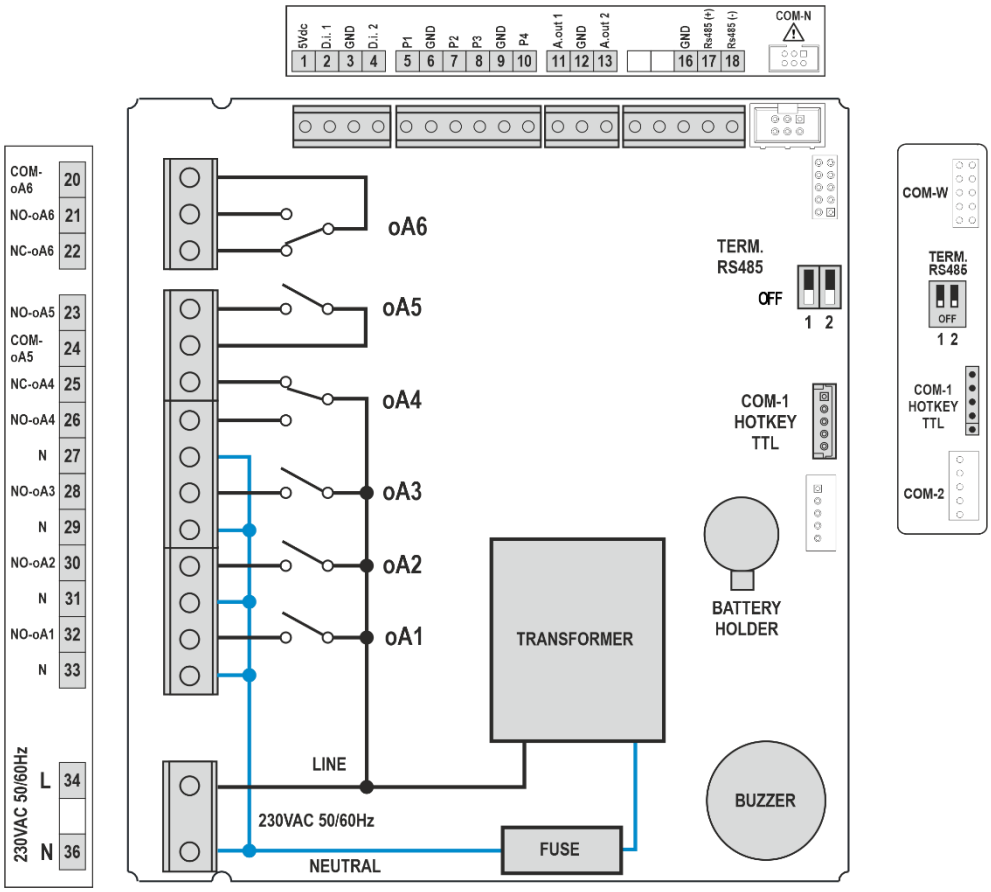

24.3 XER140P OR XER240P

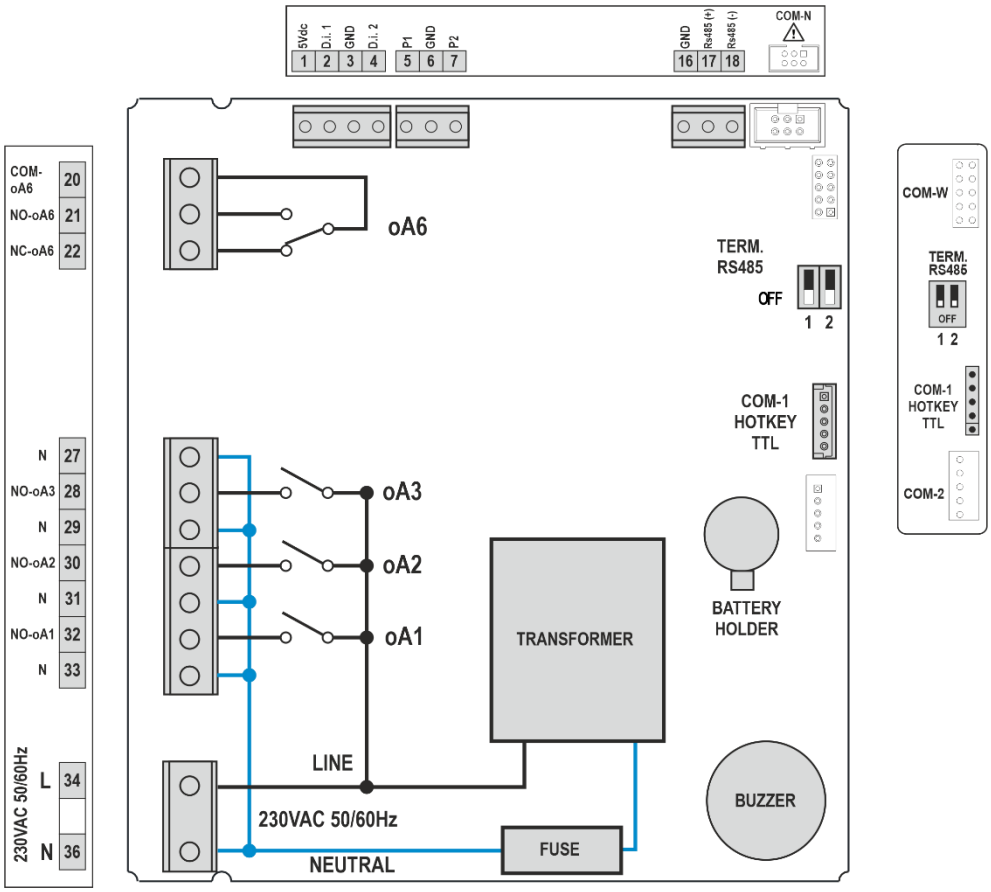

24.4 XER261P WITH CIRCUIT BREAKER

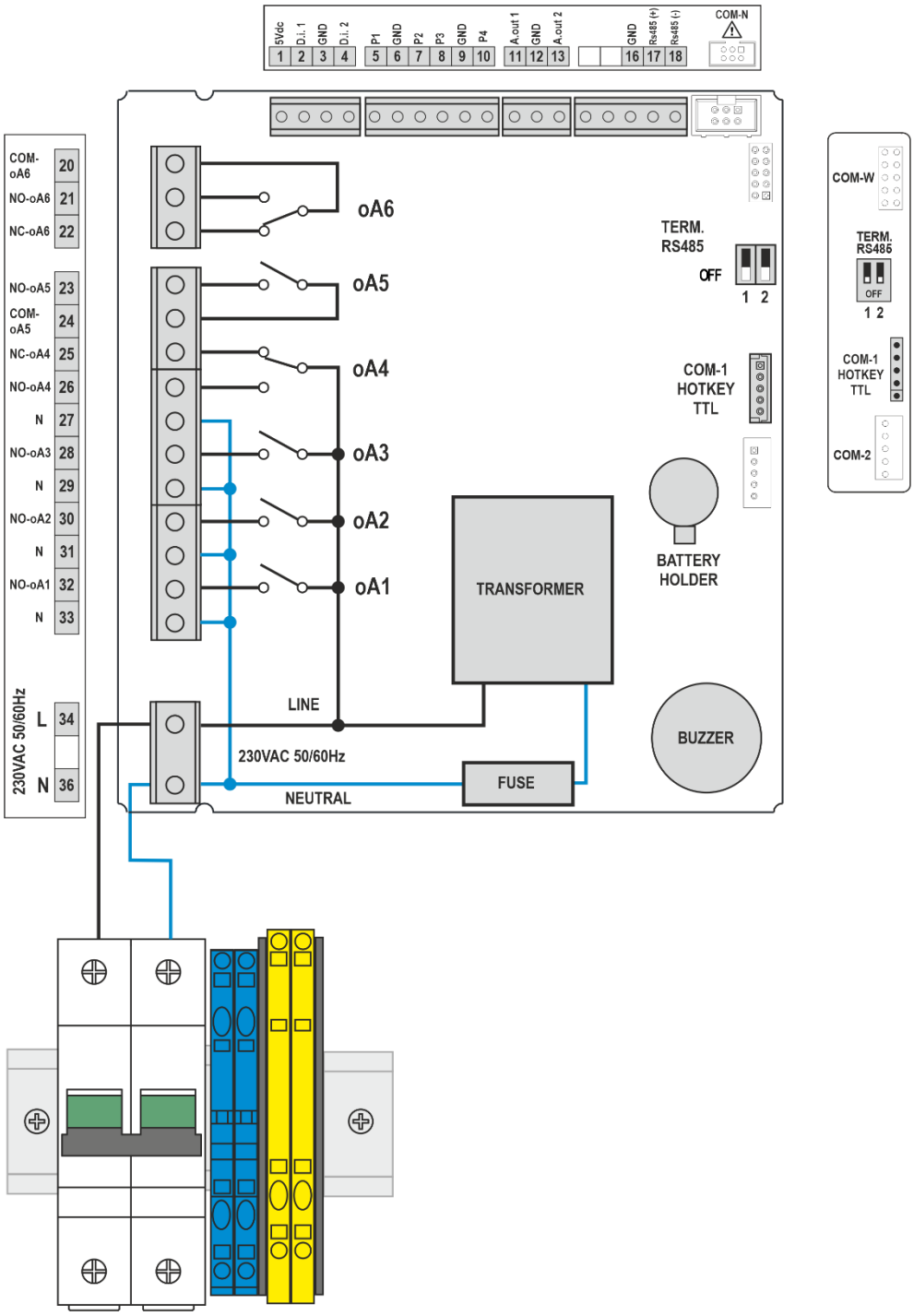

24.5 TERMINAL BLOCK DESCRIPTIONS

PIN	Label	Description
1	5Vdc	+5Vdc output, only for X-MOD motion sensor power supply
2	D.i.1	Digital input 1
3	GND	Ground for analogue and digital inputs
4	D.i.2	Digital input 2
5	A.i.1	Analogue input 1 (temperature only)
6	GND	Ground for analogue and digital inputs
7	A.i.2	Analogue input 2 (temperature only)
8	A.i.3	Analogue input 3 (temperature only)
9	GND	Ground for analogue and digital inputs
10	A.i.4	Analogue input 4 (temperature only)
11	A.out1	Analogue output 1, PWM type
12	GND	Ground for analogue and digital inputs
13	A.out2	Analogue output 2, 0-10Vdc or 4-20mA
14		Not Used
15		Not Used
16	GND	Ground for RS485 serial port
17	RS485 (+)	Positive terminal for RS485 (+) serial port
18	RS485 (-)	Negative terminal for RS485 (-) serial port

PIN	Label	Description
20	COM-oA6	Digital ouput 6: common
21	NO-oA6	Digital ouput 6: normally open
22	NC-oA6	Digital ouput 6: normally closed
23	NO-oA5	Digital ouput 5: normally open
24	COM	Digital ouput 5: common
25	NC-oA4	Digital ouput 4: normally closed
26	NO-oA4	Digital ouput 4: normally open
27	N	High voltage power supply: Neutral
28	NO-oA3	Digital ouput 3: normally open
29	N	High voltage power supply: Neutral
30	NO-oA2	Digital ouput 2: normally open
31	N	High voltage power supply: Neutral
32	NO-oA1	Digital ouput 1: normally open
33	N	High voltage power supply: Neutral
34	L	High voltage power supply: Line
35		Not Used
36	N	High voltage power supply: Neutral

COM	Label	Description
1	COM-1	Serial communication port 1 (HOTKEY or TTL)
2	COM-2	Serial communication port 2 (TTL) (*)
W	COM-W	Serial communication port W (*)
N	COM-N	Serial communication port N (*)
	TERM. RS485	Terminalization for Serial communication port 1 and 2

(*) Available only on special models

25. TECHNICAL SPECIFICATIONS

FEATURES	DESCRIPTION				
Housing	Self-extinguishing PC+ABS				
Dimensions	Front 340x226 mm; case depth 98 mm				
Mounting device	DIN rail or wall mount				
Degree of Protection	EN 60529	IP54 (front panel only)			
Power Supply	230VAC (ENEC) or 100 to 240VAC ±10%, 50/60Hz				
Overvoltage Category	II				
Rated Power	230VAC: 13VA (ENEC) 100-240VAC: 13VA				
Rated Impulse Voltage	2500V				
Display	Red display, LED type, 3 digits with decimal point and multi-function icons				
Buzzer	Internal, always present				
Software Class	A				
Terminal blocks / Terminal Connections	**Low voltage signals:** Screw terminal block, wire section between 0,5 and 2,5 mm2 Max tightening force: 0.4 N/m **High Voltage signals:** Screw terminal block, wire section between 1,5 and 4 mm2 Max tightening force: 0.5 N/m				
Data Storing	**Real Time Clock:** data maintenance up to 6 months with removable non-rechargeable lithium battery. **Other parameters:** internal flash.				
Type of Action	1.B				
Pollution Degree	2, non-condensing humidity				
Ambient Operating Temperature and Humidity	**IEC/EN**	0T60°C / 32T140°F; 20-85 rH% (non-condensing humidity)			
Shipping and storage temperature	-25T60°C; 20-85 rH% (non-condensing humidity)				
Resistance to Heat	UL 94 V-0				
Measurement range	**NTC:** -40T110°C, resolution 0.1°C or 1°C (selectable) **PT1000:** -100T150°C, resolution 0.1°C or 1°C (selectable)				
Accuracy	NTC, PT1000: ±1% compared to the full scale If NTC probe is used: Class 0.5; less than 1% in the range [-25°C to +10°C].				
Inputs	Up to 4 NTC or PT1000 (configurable)				
	Up to 2 voltage free contacts; digital inputs connected to SELV Limited energy				
Relay Outputs **IEC, all relays under Circuit breaker or Residual current Circuit Breaker with overcurrent protection.**		**Nominal**	**XER24xP**		**XER26xP**
	oA1	SPST 20A, 250VAC	8(5)A, 230Vac, 100K cycles		4(3)A, 230Vac, 100K cycles
	oA2	SPST 20A, 250VAC	4(3)A, 230Vac, 100K cycles		4(3)A, 230Vac, 100K cycles
	oA3	SPST 16A, 250VAC	3(2)A, 230Vac, 100K cycles		3(2)A, 230Vac, 100K cycles
	oA4	SPDT 16A, 250VAC			3(2)A, 230Vac, 100K cycles
	oA5	SPST 8A, 250VAC			1(1)A, 230Vac, 100K cycles
	oA6	SPDT 8A, 250VAC	1(1)A, 230Vac, 100K cycles		1(1)A, 230Vac, 100K cycles
Relay Outputs **IEC, only relays oA1, oA2, oA3, oA4 under Circuit Breaker or Residual current Circuit Breaker with overcurrent protection.**		**Nominal**	**XER24xP**		**XER26xP**
	oA1	SPST 20A, 250VAC	8(5)A, 230Vac, 100K cycles		8(5)A, 230Vac, 100K cycles
	oA2	SPST 20A, 250VAC	4(3)A, 230Vac, 100K cycles		4(3)A, 230Vac, 100K cycles
	oA3	SPST 16A, 250VAC	4(3)A, 230Vac, 100K cycles		2(2)A, 230Vac, 100K cycles
	oA4	SPDT 16A, 250VAC			2(2)A, 230Vac, 100K cycles
	oA5	SPST 8A, 250VAC			8(3)A, 230Vac, 100K cycles

FEATURES	DESCRIPTION				
	oA6	SPDT 8A, 250VAC	8(3)A, 230Vac, 100K cycles		8(3)A, 230Vac, 100K cycles
Relay Outputs **IEC, without Circuit Breaker nor Residual current Circuit Breaker with overcurrent protection.**		**Nominal**	**XER140P** **XER240P**		**XER160P** **XER260P**
	oA1	SPST 20A, 250VAC	8(5)A, 230Vac, 100K cycles		8(5)A, 230Vac, 100K cycles
	oA2	SPST 20A, 250VAC	8(5)A, 230Vac, 100K cycles		6(4)A, 230Vac, 100K cycles
	oA3	SPST 16A, 250VAC	4(3)A, 230Vac, 100K cycles		3(2)A, 230Vac, 100K cycles
	oA4	SPDT 16A, 250VAC			3(2)A, 230Vac, 100K cycles
	oA5	SPST 8A, 250VAC			8(3)A, 230Vac, 100K cycles
	oA6	SPDT 8A, 250VAC	8(3)A, 230Vac, 100K cycles		8(3)A, 230Vac, 100K cycles
Optional Relays (*)		**Nominal**	**Type**		**Type**
	oA3	SPST 16A, 250VAC	Inrush type, same currents as the above configurations (with or without circuit breaker or residual current circuit breaker)		
	oA4	SPST 16A, 250VAC	Inrush type, same currents as the above configurations (with or without circuit breaker or residual current circuit breaker)		
Maximum ampacity on terminal 34	With Circuit Breaker or RCBO: 16A MAX (oA1+oA2+oA3+oA4+oA5+oA6 or oA1+oA2+oA3+oA4) Without Circuit Breaker nor RCBO: 20A MAX (oA1+oA2+oA3+oA4)				
Analogue Outputs	**1Ao**	**Frequency output:** Supply max voltage=12Vdc; Max supply current=2mA; duty cycle 50%; 0 to 166 Hz Accuracy: ±1Hz compared to the full scale **PWM:** Supply max voltage=12Vdc; Max supply current=2mA; 0 to 4kHz			
	2Ao	4-20mA 0-10Vdc; Max supply current = 5mA Accuracy: ±1% compared to the full scale			
I/O port	HOT-KEY: MAX voltage allowed is 5 VDC. **DO NOT CONNECT ANY EXTERNAL POWER SUPPLY.**				
Purpose of control	Operating control				
Construction of control	Incorporated control, intended to be used in Class I or Class II equipment				
Approvals	R290/R600a: relays tested according to IEC EN60079:0 and IEC EN60079:15 IEC 60730-1; IEC 60730-2-9				
Circuit Breaker (**) **Model: ABB S202M-C16**	**Number of poles:** 2; **Rated Current:** 16 A; **C characteristic**; **Icn**=10kA **Standard:** IEC/EN 60898-1, IEC/EN 60947-2				
Residual current Circuit Breaker with overcurrent protection (***) **Model: ABB DS201M-C16**	**Number of poles:** 1P+N; **Rated Current:** 16 A; **C characteristic**; **AC30**; **Icn=**10kA **Standard:** IEC/EN 61009				

(*) See official How-To-Order for available inrush models.

(**) (***): Circuit Breaker or Residual Current Circuit Breaker is an optional component, selectable through official How-To-Order. Any third-party Circuit Breaker or Residual Current Circuit Breaker with overcurrent protection used (for replacement or for installing operations outside Dixell) **MUST HAVE** the same or better characteristics.

Here follow the exact codes of the approved models:

- ABB: model **S202M-C16** (Circuit Breaker)
- ABB: model **DS201M-C16** (Residual Current Circuit Breaker with overcurrent protection)

26. APPENDIX

26.1 TOOLS

26.1.1 X-MOD

	The **X-MOD** is a motion detection sensor that allows to detect the proximity of customers or service staff. 5Vdc power supply version must be used.

26.1.2 WIZMATE

	WIZMATE software, used in combination with the XJ485USB, allows to manage the configuration of the controller.

26.1.3 HOTKEY

	The **HOT-KEY** is used for a quick and easy upload (from device to **HOT-KEY**) or download (from **HOT-KEY** to device) of the parameter map. The 64K version must be used (code **DK00000300**).

26.1.4 USB TO RS485 CONVERTER

	XJ485USB is an optically isolated converter with 2.5kV maximum voltage isolation on data channels. It has a small plastic box with 2 indication LEDs, RX and TX, to quickly monitor the network communication. Power supply directly from USB port.

KAMER SOĞUTMA SANAYİ ve TİC. LTD. ŞTİ.
KAMER SOGUTMA SAN. VE TİC.LTD.ŞTİ.
Dolapdere Cad. No:119/B
Şişli/Istanbul TÜRKİYE
Tel: +90 212 255 11 11
Fax: +90 212 253 46 25
Web: http://www.kamersogutma.com
E-mail: info@kamersogutma.com

DIXELL EMERSON
Dixell S.r.l. - Z.I. Via dell'Industria, 27 - 32016 Alpago (BL) ITALY
Tel. +39.0437.9833 r.a. - Fax +39.0437.989313 - EmersonClimate.com/Dixell - dixell@emerson.com